# Precedent Golf Car
# Owner's Manual

## Electric Vehicle with ERIC Charging System
## Gasoline Vehicle with Subaru EX-40 Engine

**[Refer to back cover for applicable build code range]**




Ingersoll Rand
Industrial Technologies

# NOTICE

This manual is valid for vehicles manufactured in the build code range provided on the back cover of this manual. If the vehicle build code is different from that shown on the back cover of this manual, please contact your nearest dealer or go to www.clubcar.com to retrieve the proper owner's manual for the vehicle. See also Model Identification in this manual.

Warranty information appears at the end of this manual. No other warranties, expressed or implied, are contained herein. Your authorized representative checked the vehicle before it was delivered to you and will provide you a copy of the completed vehicle warranty registration form.

Club Car is not liable for errors in this manual or for incidental or consequential damages that result from the use of the material in this manual.

The two-passenger golf vehicle conforms to the current American National Standards Institute's Z130 Safety and Performance Requirements for Golf Cars. This standard, which promotes safety in the design, application, and operation of golf cars, defines a golf car as "a vehicle used to convey a person or persons and equipment to play the game of golf in an area designated as a golf course." Throughout this manual, the words "golf car" and "vehicle" are used interchangeably.

This spark ignition system complies with the Canadian standard ICES-002.

This manual contains proprietary information that is protected by copyright. All rights are reserved. No part of this manual may be photocopied, reproduced, or translated to another language without the written consent of Club Car, LLC.

The information contained in this document is subject to change without notice.

Club Car reserves the right to make design changes to vehicles without obligation to make these changes on units previously sold.

These vehicles do not conform to U.S. Federal Motor Vehicle Safety Standards (FMVSS) for automobiles or to FMVSS 500 for low-speed vehicles, and are not equipped for operation on public streets, roads, or highways.

Operation of this vehicle above 3000 feet altitude may require an altitude kit. Please contact your dealer.

If in English, this manual is the Original Instructions provided by the manufacturer. If in any language other than English, this manual is a translation of the Original Instructions.

**P.O. Box 204658**
**Augusta, Georgia 30917–4658 USA**
**Telephone 706–863–3000**
**Service Parts Fax 706–855–7413**
**www.clubcar.com**

Copyright © 2014, 2015 Club Car, LLC
*Club Car, Tranquility, and ArmorFlex*
are registered trademarks of Club Car, LLC
This manual effective November 2015

## FOREWORD

Thank you for choosing Club Car, the name most widely recognized as the industry leader in vehicle efficiency and long-lasting value. You have chosen the finest golf car on the market. Please protect your investment and ensure that your Club Car provides years of reliable, superior performance by reading and following the maintenance instructions in this manual.

Your comfort and safety are important to us as well, so we urge you to read and follow the step-by-step operating instructions and safety precautions in this manual. These instructions must be followed in order to avoid the risk of severe personal injury. If you rent or loan your vehicle to others, we recommend that you ask them to read this manual before they operate the vehicle.

Club Car products are backed by a customer support system designed to offer you fast, courteous service. In the event that your golf car needs repairs or service, please contact your local authorized Club Car dealer or distributor, who will be able to provide technical advice, perform warranty work, and sell parts and service manuals.

To find your local authorized Club Car dealer, visit www.clubcardealer.com, call 1-800-ClubCar (258–2227), or scan this Quick Response (QR) code to be taken to the Club Car dealer locator. Refer to Figure 1. Download a QR code reader such as RedLaser or Barcode Scanner to your cell phone or tablet.

If you would prefer to write to us, direct your letter to: Club Car LLC, Attention: Marketing Services, P.O. Box 204658, Augusta, Georgia 30917-4658 USA.

We hope you will consider this owner's manual a permanent part of your golf car. If you sell the vehicle, please include the manual so that the next owner will have the important operating, safety, and maintenance information it contains.

Dealer Locator QR Code



3118

**Figure 1 Dealer Locator QR Code**

## TABLE OF CONTENTS


Technical Publication Customer Satisfaction Online Survey ..... 5

Maintenance Items ..... 6

Safety Decal and Feature Identification ..... 7

Practice Safety ..... 13

Proposition 65 – State of California ..... 13

Safety Details ..... 14

General Warnings ..... 15

General Information ..... 20

Model Identification ..... 20

Safety Committee ..... 21

Controls and Indicators – Electric Vehicles ..... 22

Controls and Indicators – Gasoline Vehicles ..... 27

Pre-Operation and Daily Safety Checklist ..... 30

Driving Instructions ..... 32

Towing ..... 34

Transporting on a Trailer ..... 35

Storage – Electric Vehicle ..... 35

Storage – Gasoline Vehicle ..... 38

Maintenance ..... 40

Periodic Service Schedules ..... 41

Periodic Lubrication Schedules ..... 45

Batteries – Electric Vehicles ..... 47

Single Point Watering System (SPWS) ..... 52

Battery Charger ..... 54

Battery – Gasoline Vehicles ..... 62

Engine Oil – Gasoline Vehicle ..... 63

Fueling Instructions – Gasoline Vehicles ..... 66

Cleaning the Vehicle ..... 67

Accessories ..... 67

Subsequent Owner Registration ..... 68

Precedent Four-Passenger Vehicle ..... 68

Vehicle Specifications ..... 70

E.R.I.C. Battery Charger Specifications ..... 72
Warranties ..... 73
EC Declaration Of Conformity ..... 87

# TECHNICAL PUBLICATION CUSTOMER SATISFACTION ONLINE SURVEY

Let your voice be heard!

Please participate in the Technical Publication customer satisfaction online survey.
This survey takes less than five minutes to complete and your responses will help examine current performance and identify areas for future improvement.

Our top priority is to provide timely, accurate, and user friendly manuals.

The online survey can be found at *http://bit.ly/1w9uFMh* or using the QR Code below.

**Online Survey QR Code**



# MAINTENANCE ITEMS

## ⚠ WARNING

- **Read before attempting any service on the vehicle.**
- **Before servicing vehicle, read complete section(s) and any referenced information that may be relevant to the service or repair to be performed.**

| MAINTENANCE ITEMS | |
|---|---|
| **Battery Terminal Protector Spray**<br>CC P/N 1014305 | **Battery Watering Hand Pump (required for SPWS vehicles)**<br>CC P/N 104006101 |
| **Chassis Lube**<br>EP NLGI Grade 2 (commercially available) | **Deionizer (for both SPWS and non-SPWS)**<br>CC P/N 105166801 |
| **Deionizer Battery Watering Gun (required for non-SPWS vehicles)**<br>CC P/N AM 10818 | **Deionizer Filter Replacement Cartridge (for both SPWS and non-SPWS)**<br>CC P/N 104005901 |
| **Deionizer Filter Replacement Cartridge (for non-SPWS)**<br>CC P/N AM10975 | **Dry Moly Lube, white lithium grease NLGI #2**<br>CC P/N 1012151 |
| **Engine Air Filter (404 cc)**<br>CC P/N 102558201 | **Engine Fuel Filter (EFI)**<br>CC P/N 105073001 |
| **Fuse, 0.5 Amp**<br>CC P/N AM1214301 | **Fuse 2 Amp**<br>CC P/N 103924801 |
| **Fuse, 10 Amp**<br>CC P/N 1012295 | **Fuse 15 Amp**<br>CC P/N 102538601 |
| **Fuse, 30 Amp**<br>CC P/N 102492301 | **Spark Plug O.H.C. (404 cc)**<br>CC P/N 105017801 |

***NOTE:*** *This manual represents the most current information at the time of publication. Club Car is continually working to further improve its vehicles and other products. These improvements may affect servicing procedures. Any modification and/or significant change in specifications or procedures will be forwarded to all Club Car dealers and will, when applicable, appear in future editions of this manual.*

*Club Car reserves the right to change specifications and designs at any time without notice and without the obligation of making changes to units previously sold.*

*There are no warranties expressed or implied in this manual. See the limited warranty found in the vehicle Owner's Manual.*

# SAFETY DECAL AND FEATURE IDENTIFICATION

The following pages contain safety decal and feature identification information. For detailed information on specific features, read the appropriate section in this manual.

## PRECEDENT (ELECTRIC VEHICLES)

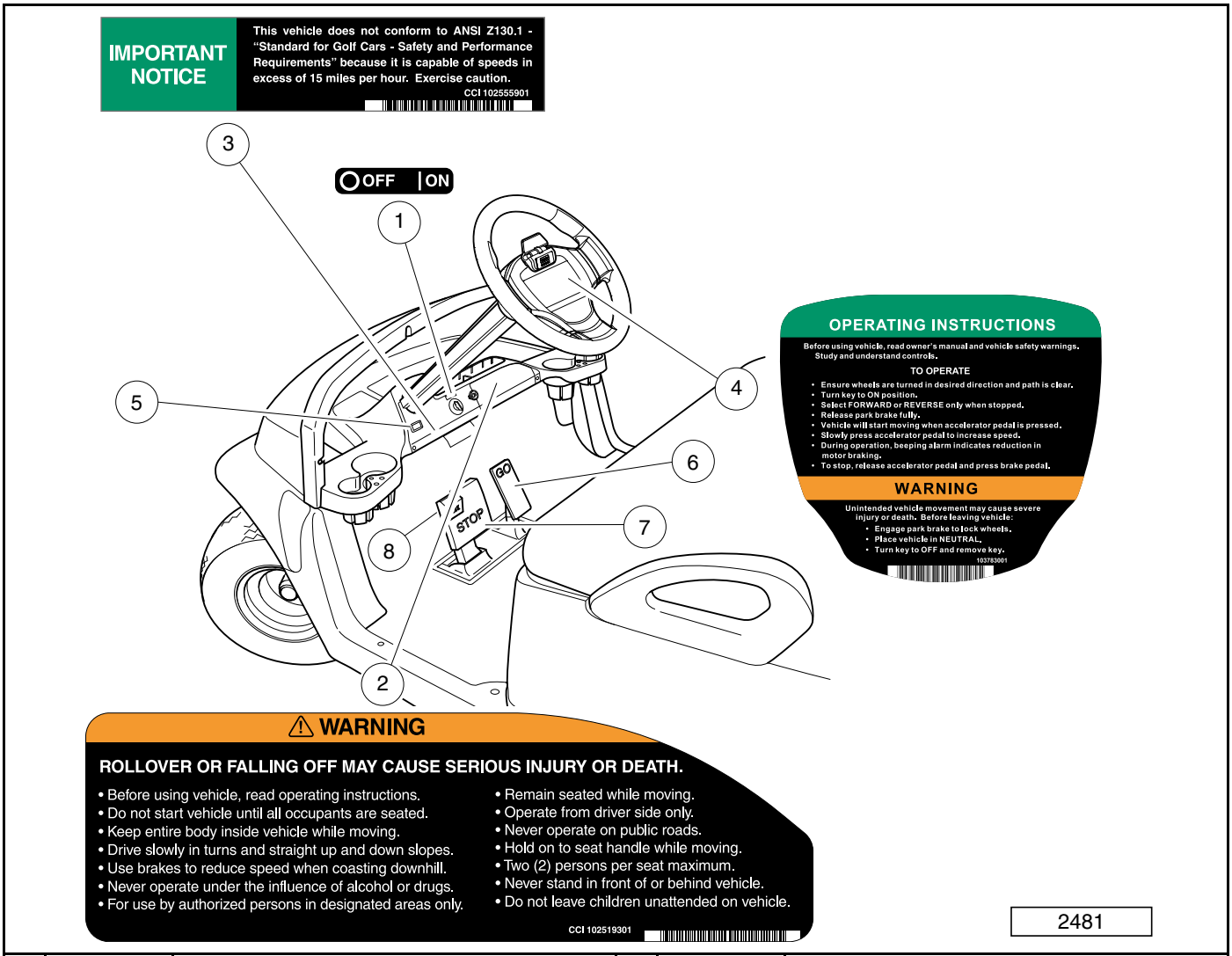


| | | | | | |
|---|---|---|---|---|---|
| 1 | 101825101 | Decal, On/Off Key Switch (above key switch) | 5 | | Charge Indicator Light |
| 2 | 102519301 | Decal, Rollover Warning (on instrument panel) | 6 | | Accelerator Pedal |
| 3 | 102555901 | Decal, Private Speed Notice (below instrument panel) (With Private Speed Notice optional) | 7 | | Brake Pedal |
| 4 | 103783001 | Decal, Operating Instructions (on steering wheel) | 8 | | Park Brake Pedal |

## PRECEDENT (ELECTRIC VEHICLES)

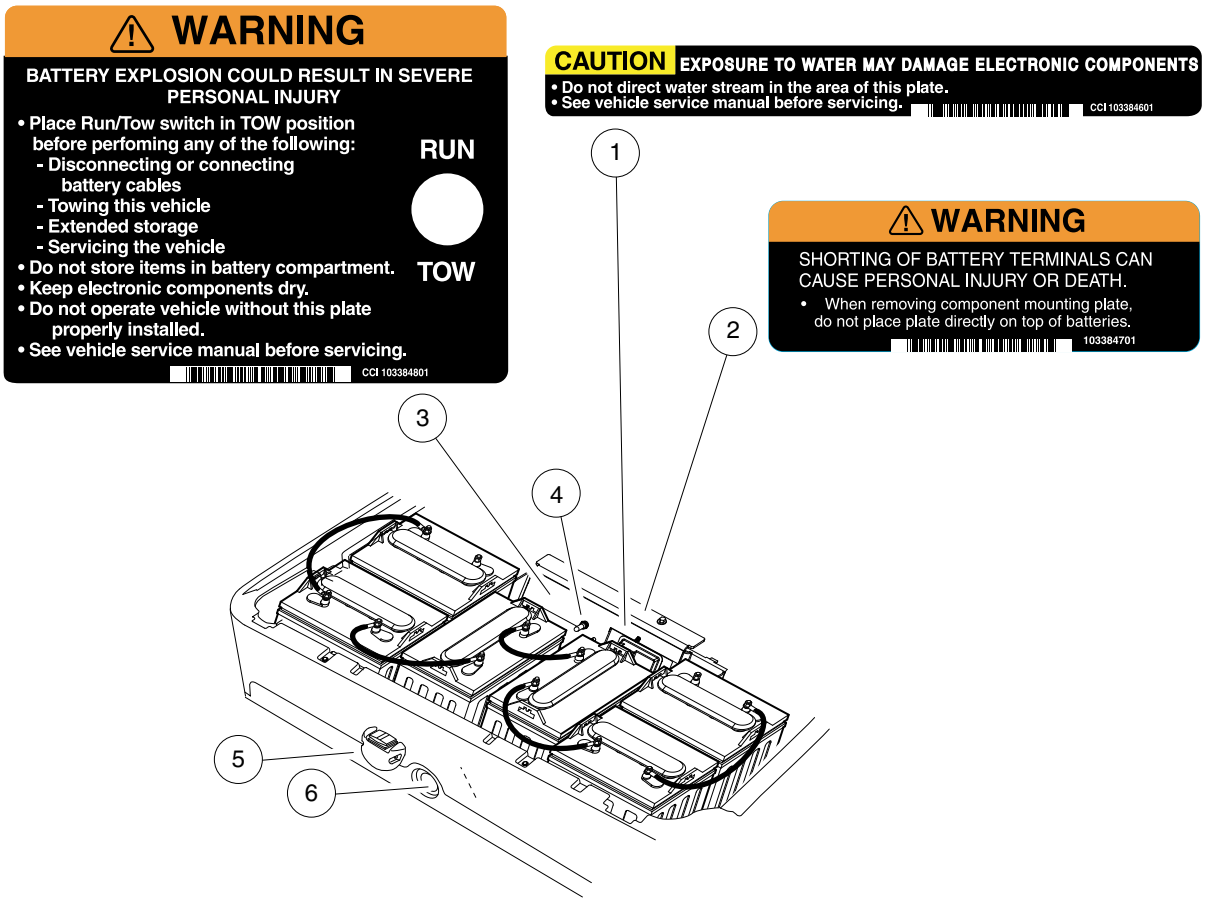


| | | | | | |
|---|---|---|---|---|---|
| 1 | 103384601 | Decal, Water Exposure Caution | 5 | | Forward/Reverse Control |
| 2 | 103384701 | Decal, Battery Terminal Warning | 6 | | Battery Charger Receptacle |
| 3 | 103384801 | Decal, Tow/Run Warning | | | |
| 4 | | Tow/Run Switch | | | |

## PRECEDENT (GASOLINE VEHICLES)

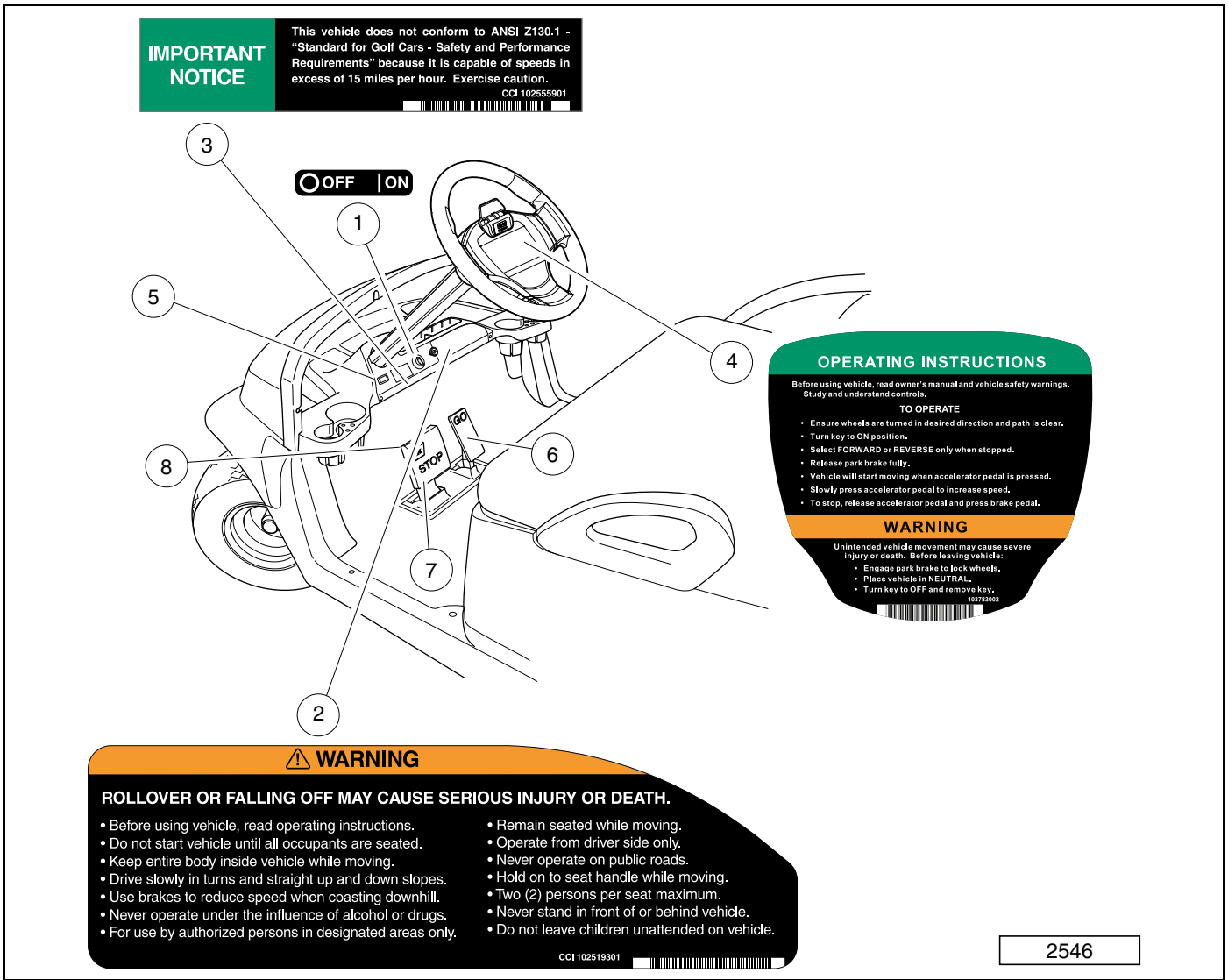


| | | | | | |
|---|---|---|---|---|---|
| 1 | 101825101 | Decal, On/Off Key Switch (above key switch) | 5 | | Low Oil Warning Light |
| 2 | 102519301 | Decal, Rollover Warning (on instrument panel) | 6 | | Accelerator Pedal |
| 3 | 102555901 | Decal, Private Speed Notice (below instrument panel) (With Private Speed Notice optional) | 7 | | Brake Pedal |
| 4 | 103783002 | Decal, Operating Instructions (on steering wheel) | 8 | | Park Brake Pedal |

## PRECEDENT (GASOLINE VEHICLES)

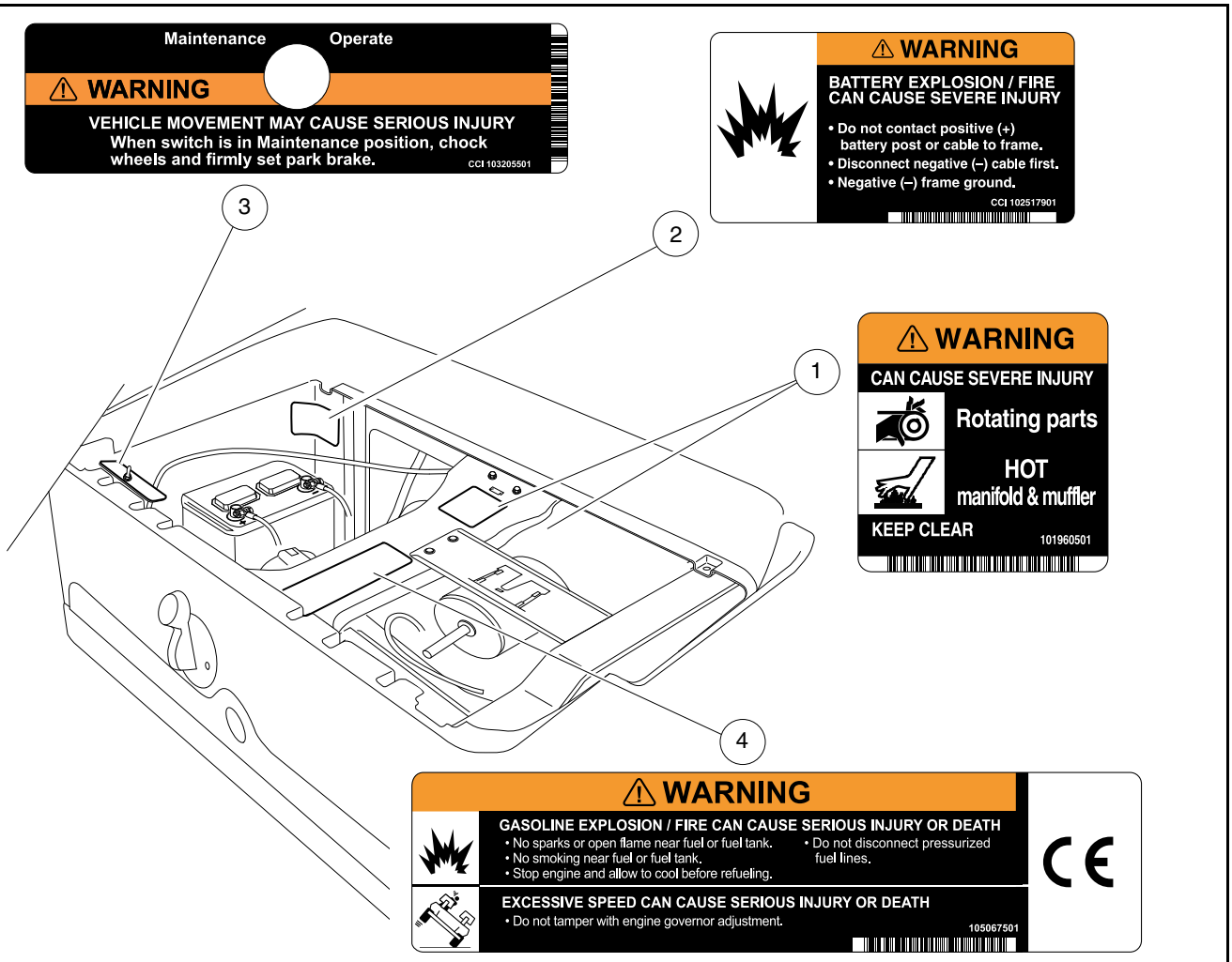


***NOTE:*** *Top-Post Battery shown*

| | | | | | |
|---|---|---|---|---|---|
| 1 | 101960501 | Decal, Rotating Parts/Hot Manifold Warning (on engine, starter/generator, and transaxle) | 4 | 105067501 | Decal, Gas/Governor Warning (on fuel tank hold-down bracket) |
| 2 | 102517901 | Decal, Frame Ground Warning (on vehicle frame, under seat) | | | |
| 3 | 103205501 | Decal, Maintenance-Operate Switch | | | |

## PRECEDENT (GASOLINE VEHICLES)

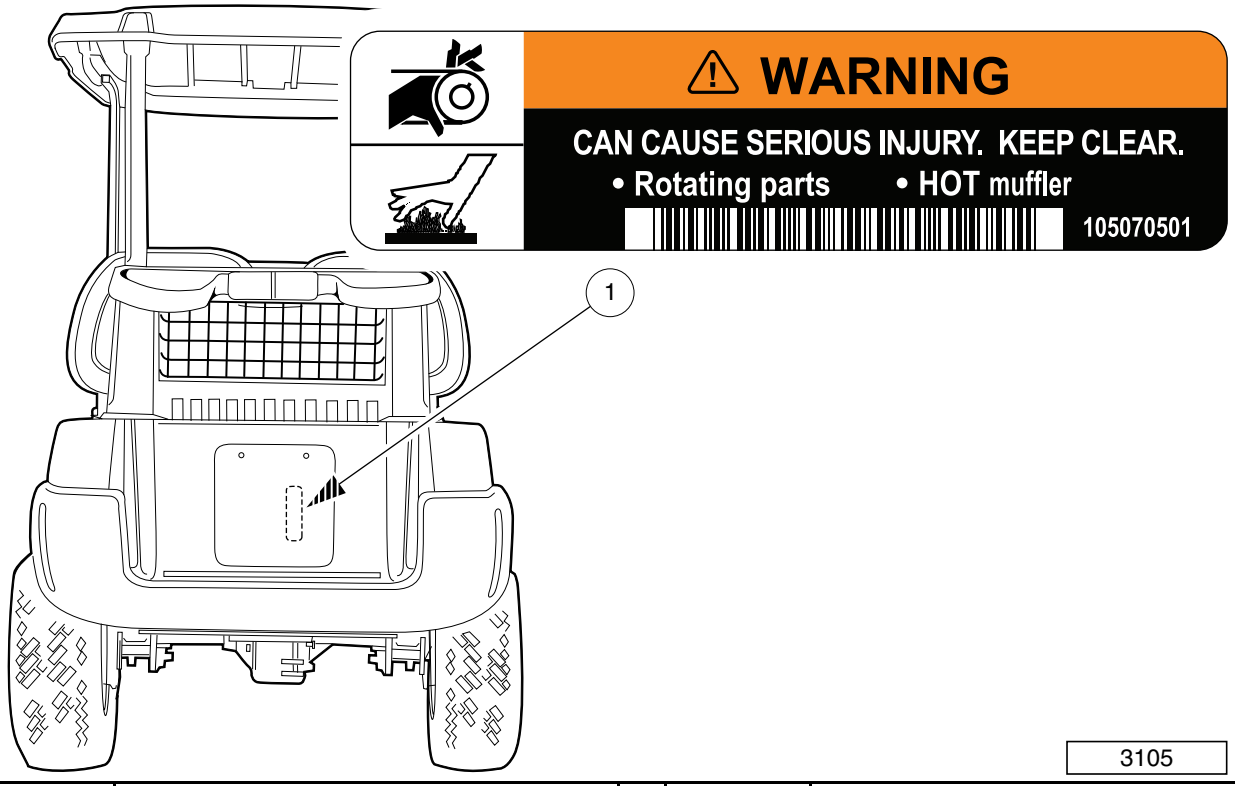


| | | | | | |
|---|---|---|---|---|---|
| 1 | 105070501 | Decal, Rotating Parts/Hot Manifold Warning (located behind access panel, on shifter cable bracket) | | | |

## PRECEDENT VILLAGER 4

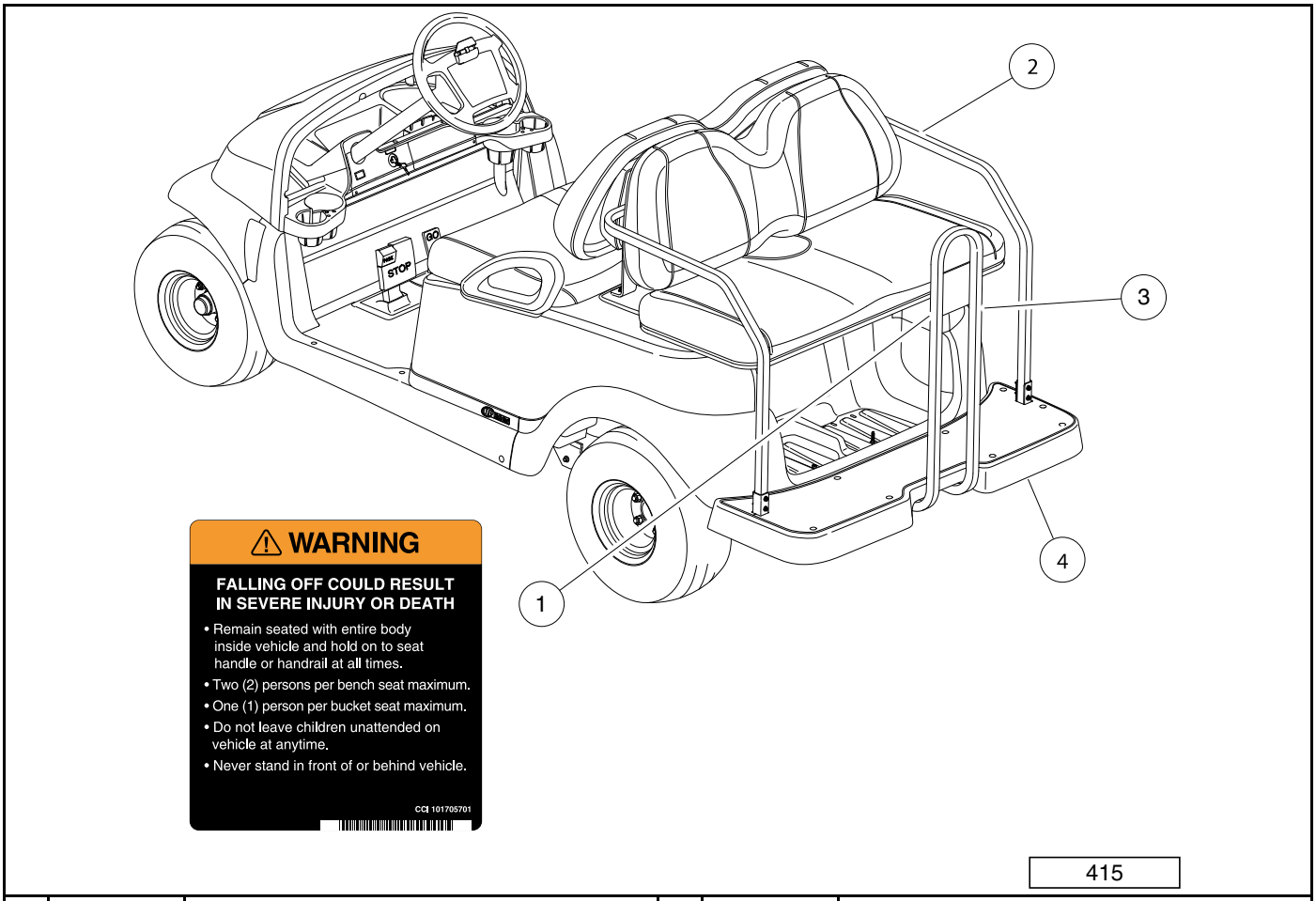


| | | | | | |
|---|---|---|---|---|---|
| 1 | 101705701 | Decal, Falling Off Warning (on rear-facing seat hand rail and/or on back side of forward-facing seat backs) | 4 | | Foot rest |
| 2 | | Hand hold | | | |
| 3 | | Hand rail | | | |

## PRACTICE SAFETY

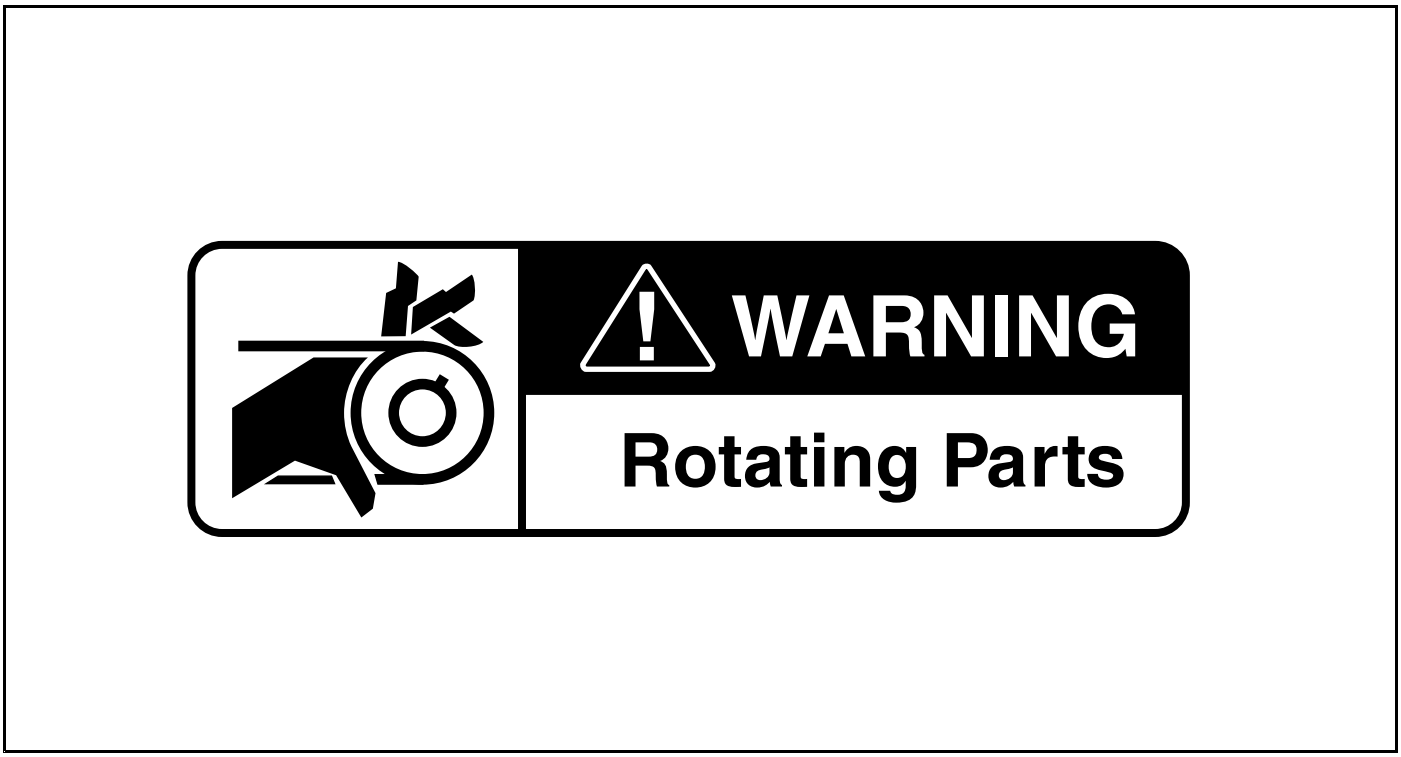


399
**Figure 2 Practice Safety**

Safety signs like you see above may at first seem shocking, but their impact is mild compared with the reality of severe personal injury.

Your safety and satisfaction are of the utmost importance to us. That is why before operating the vehicle, we urge you to review the information in this manual. Understand and become familiar with the DANGER, WARNING, and CAUTION statements and procedures it contains, along with the safety decals that are affixed to your vehicle.

Take time to understand the language of safety. It is a language that can save your life.

## PROPOSITION 65 – STATE OF CALIFORNIA

### ⚠ WARNING

- **This product contains or emits chemicals or substances that have been determined by the state of California to cause cancer and birth defects or other reproductive harm.**

# SAFETY DETAILS

## ⚠ WARNING

- **This owner's manual should be read completely before attempting to drive or service the vehicle. Failure to follow the instructions in this manual could result in property damage, severe personal injury, or death.**

It is important to note that some vital statements throughout this manual and on the decals affixed to the vehicle are preceded by the words DANGER, WARNING, or CAUTION. For your protection, we recommend that you take special notice of these safety precautions. Safety precautions are essential and must be followed.

Throughout this manual and on the operation and safety decals affixed to the vehicle, the words "golf car" and "vehicle" are used interchangeably. "Golf car" is defined in the Notice of this manual and no other representation is stated or implied.

If any of the operation or safety decals on the vehicle become damaged, have been removed or cannot be easily read, they should be replaced immediately to avoid possible property damage, personal injury, or death. Contact your distributor/dealer.

## ⚠ DANGER

- **A DANGER indicates an immediate hazard that will result in severe personal injury or death.**

## ⚠ WARNING

- **A WARNING indicates an immediate hazard that could result in severe personal injury or death.**

## ⚠ CAUTION

- **A CAUTION with the safety alert symbol indicates a hazard or unsafe practice that could result in minor personal injury.**

## CAUTION

- **A CAUTION without the safety alert symbol indicates a potentially hazardous situation that could result in property damage.**

# GENERAL WARNINGS

The following safety statements must be heeded whenever the vehicle is being operated, repaired, or serviced. Vehicle feature identification information is also included. **See Safety Decal and Feature Identification on page 7.** Other specific safety statements appear throughout this manual and on the vehicle.

## ⚠ DANGER

- **Battery – Explosive gases! Do not smoke. Keep sparks and flames away from the vehicle and service area. Ventilate when charging or operating vehicle in an enclosed area. Wear a full face shield and rubber gloves when working on or near batteries.**
- **Gasoline – Flammable! Explosive! Do not smoke. Keep sparks and flames away from the vehicle and service area. Service only in a well-ventilated area.**
- **Do not operate engine in an enclosed area without proper ventilation. The engine produces carbon monoxide, which is an odorless, deadly poison.**
- **The vehicle will not provide protection from lightning, flying objects, or other storm-related hazards. If caught in a storm while driving a Club Car vehicle, exit the vehicle and seek shelter in accordance with applicable safety guidelines for your location.**

## ⚠ WARNING

- **Follow the procedures exactly as stated in this manual, and heed all DANGER, WARNING, and CAUTION statements in this manual as well as those on the vehicle and battery charger.**
- **Children requiring a child safety seat must not ride in vehicle.**
- **Do not leave children unattended on vehicle.**
- **Prior to leaving the vehicle unattended or servicing the vehicle, set the park brake, place the Forward/Reverse handle or switch in the NEUTRAL position, turn the key switch to the OFF position, and remove the key. Chock the wheels when servicing the vehicle.**
- **Improper use of the vehicle or failure to properly maintain it could result in decreased vehicle performance, severe personal injury, or death.**
- **Any modification or change to the vehicle that affects the electrical system, stability or handling of the vehicle, or increases maximum vehicle speed beyond factory specifications, could result in severe personal injury or death.**
- **Check the vehicle for proper location of all vehicle safety and operation decals and make sure they are in place and are easy to read. See Safety Decal and Feature Identification on page 7.**
- **Only trained technicians should service or repair the vehicle or battery charger. Anyone doing even simple repairs or service should have knowledge and experience in electrical and mechanical repair. The appropriate instructions must be used when performing maintenance, service, or accessory installation.**
- **Wear safety glasses or approved eye protection when servicing the vehicle or battery charger. Wear a full face shield and rubber gloves when working on or near batteries.**
- **Do not wear loose clothing or jewelry such as rings, watches, chains, etc., when servicing the vehicle or battery charger.**

**WARNING CONTINUED ON NEXT PAGE**

## ⚠ WARNING

- **Use insulated tools when working near batteries or electrical connections. Use extreme caution to avoid shorting of components or wiring.**

**Electric vehicles only:**

- **Place Tow/Run switch in the TOW position before disconnecting or connecting the batteries. Failure to heed this warning could result in a battery explosion or severe personal injury.**
- **To avoid unintentionally starting an electric vehicle, disconnect the batteries and discharge the controller. See Disconnecting the Batteries – Electric Vehicles on page 18.**

**Gasoline vehicles only:**

- **To avoid unintentionally starting a gasoline vehicle, disconnect the battery and spark plug wire. See Side-Post Battery: Disconnecting the Battery-Gasoline Vehicles on page 17.**
  **See Top-Post Battery: Disconnecting the Battery-Gasoline Vehicles on page 17.**
- **Frame ground – Do not allow tools or other metal objects to contact frame when disconnecting battery cables or other electrical wiring. Do not allow a positive wire to touch the vehicle frame, engine, or any other metal component.**

## DISABLING THE VEHICLE

1. Set the park brake.
2. Turn the key switch OFF and remove the key.
3. Place the Forward/Reverse control in the NEUTRAL position.
4. In addition, chock the wheels if servicing or repairing the vehicle.

## SIDE-POST BATTERY: DISCONNECTING THE BATTERY-GASOLINE VEHICLES

1. Disable the vehicle. **See Disabling the Vehicle on page 17.**
2. Disconnect the battery cables, negative (–) cable first, as shown **(Figure 3)**.
3. Disconnect the spark plug wire(s) from the spark plug(s).

## SIDE-POST BATTERY: CONNECTING THE BATTERY-GASOLINE VEHICLES

1. Connect the battery cables, positive (+) cable first.
2. Tighten battery terminals to 80 in·lb (9 N·m).
3. Coat terminals with Battery Terminal Protector Spray (CC P/N 1014305) to minimize corrosion.
4. Connect the spark plug wire(s) to the spark plug(s).

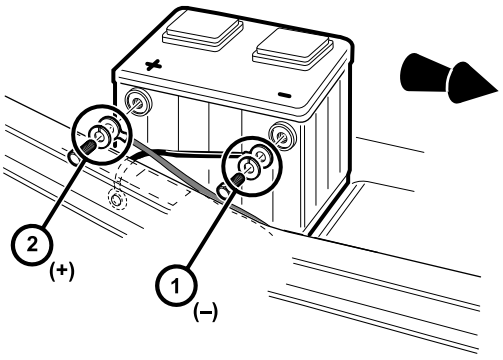


(Viewed from passenger side of vehicle)
1. Remove negative battery cable.
2. Remove positive battery cable.

Connect battery cables in reverse order.

1

**Figure 3 Side-Post Battery Cable Removal: Gasoline Vehicle**

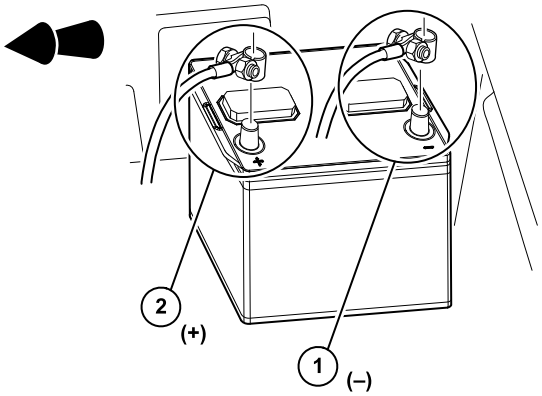


(Viewed from driver side of vehicle)
1. Remove positive terminal cover.
2. Remove negative battery cable.
3. Remove positive battery cable.

Connect battery cables in reverse order.

3167

**Figure 4 Top-Post Battery Cable Removal: Gasoline Vehicles**

## TOP-POST BATTERY: DISCONNECTING THE BATTERY-GASOLINE VEHICLES

1. Disable the vehicle. **See Disabling the Vehicle on page 17.**
2. Remove positive terminal cover, disconnect the battery cables, negative (–) cable first, as shown **(Figure 4)**.
3. Disconnect the spark plug wire(s) from the spark plug(s).

## TOP-POST BATTERY: CONNECTING THE BATTERY-GASOLINE VEHICLES

1. Connect the battery cables, positive (+) cable first.
2. Tighten battery terminals to 41 in·lb (4.3 N·m).
3. Coat terminals with Battery Terminal Protector Spray (CC P/N 1014305) to minimize corrosion.
4. Attach positive terminal cover.
5. Connect the spark plug wire(s) to the spark plug(s).

## DISCONNECTING THE BATTERIES – ELECTRIC VEHICLES

1. Disable the vehicle. **See Disabling the Vehicle on page 17.**
2. Place Tow/Run switch in the TOW position before disconnecting or connecting the batteries. Failure to heed this warning could result in a battery explosion or severe personal injury.
3. Disconnect the batteries, negative (–) cable first, as shown **(Figure 5)**.
4. After disconnecting the batteries, wait 90 seconds for the controller capacitors to discharge.

## CONNECTING THE BATTERIES – ELECTRIC VEHICLES

1. Ensure the Tow/Run switch is in the TOW position.
2. Connect the battery cables, positive (+) cable first.
3. Tighten battery terminals to 110 in·lb (12.4 N·m).
4. Coat terminals with Battery Terminal Protector Spray (CC P/N 1014305) to minimize corrosion.

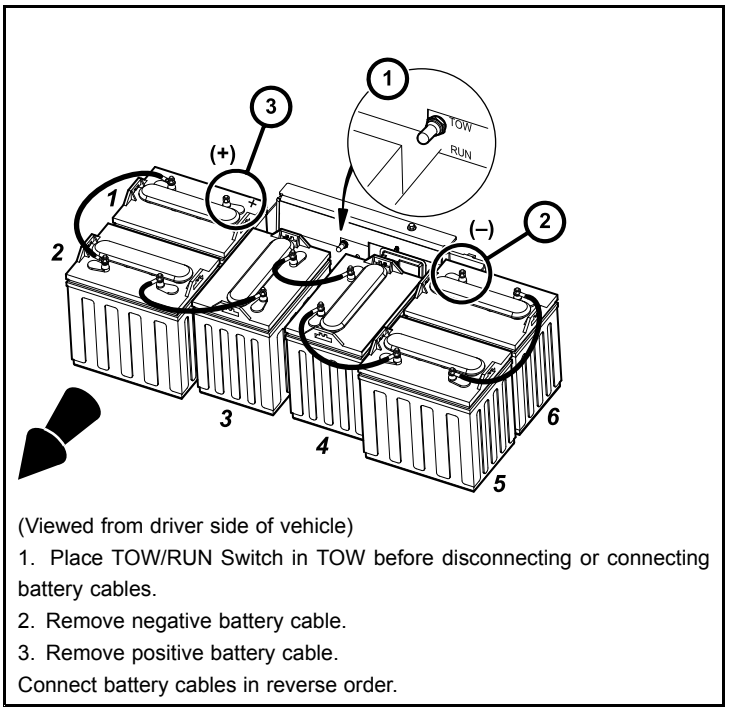


(Viewed from driver side of vehicle)
1. Place TOW/RUN Switch in TOW before disconnecting or connecting battery cables.
2. Remove negative battery cable.
3. Remove positive battery cable.
Connect battery cables in reverse order.

49A

**Figure 5 Battery Cable Removal – Electric Vehicles 6x8-Volt Battery Configuration**

## RECYCLING LEAD-ACID BATTERIES

### ⚠ WARNING

- **Lead-acid batteries contain lead (Pb), other metals, acids and other compounds. If improperly handled, they can contaminate both water and soil, causing environmental damage and personal injury.**

Lead-acid batteries are identified by the symbol shown below and should be properly recycled **(Figure 6)**. They cannot be disposed as municipal waste and must be collected separately. Responsibility for environmental protection must be shared, not only by the manufacturers of the batteries, but by people who use the batteries as well. Please contact your nearest Club Car dealer or distributor for information on how to properly recycle your batteries.

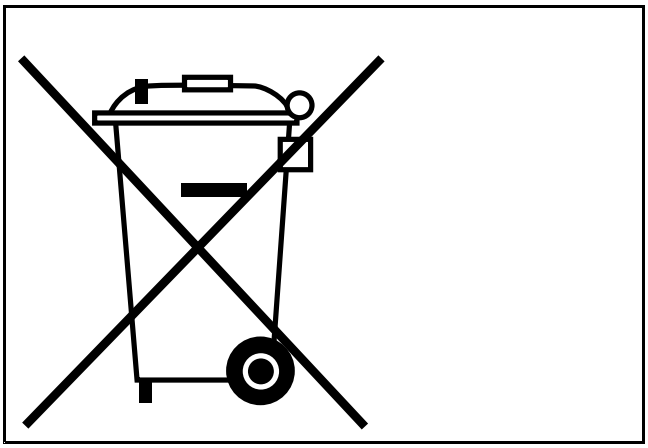

1403

**Figure 6 Dispose of Lead-acid Batteries Properly**

### INTERNATIONAL SAFETY SYMBOLS ON BATTERIES

Anyone using, repairing, or servicing the vehicle must understand and heed the safety symbols on the vehicle battery or batteries.




1. Shield eyes.
2. Read and follow operating instructions.
3. No smoking, no open flames, no sparks.
4. Keep away from children.
5. Battery acid hazard.
6. Explosive gas hazard.

Refer to General Warnings for more information.

1642

**Figure 7 International Safety Symbols on Batteries**

## GENERAL INFORMATION

Precedent Golf Cars are available with either electric or gasoline power. Throughout this manual, important features unique to each model are highlighted. We urge the owner/operator to read and understand this manual, and to pay special attention to the features specific to his/her vehicle(s).

## MODEL IDENTIFICATION

The serial number of each vehicle is printed on a bar code decal mounted either below the passenger side cup holder or above the accelerator or brake pedal (Example: CC5819–123456) **(Figure 8)**.

The two letters (1) at the beginning of the serial number indicate the vehicle model. The following four digits (2) indicate the model year and production week during which the vehicle was built. The six digits (3) following the hyphen represent the unique sequential number assigned to each vehicle built within a given model year. **See following NOTE.**

***NOTE:*** *Have the vehicle serial number available when ordering parts or making inquiries.*

**Build Code:** The build code (4) is a five-digit number that appears on the vehicle serial number decal. The build code exists to enable the user to identify the correct owner's manual for a vehicle. This owner's manual is valid for the build code range indicated on the back cover of this owner's manual.

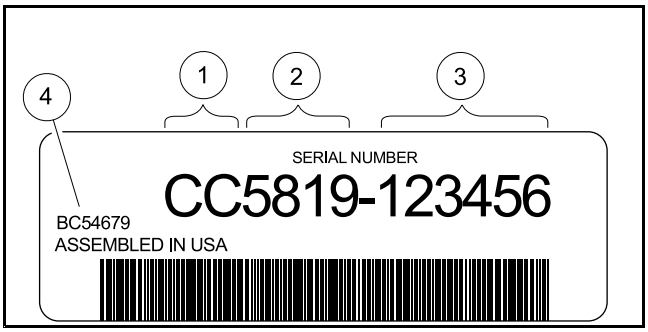


2843

**Figure 8 Serial Number Decal**

## SAFETY COMMITTEE

If the golf car is to be rented or is part of a fleet, we strongly recommend that a safety committee be appointed. One of the main concerns of this committee should be the safe operation of the golf cars. This should include at a minimum:

- Where golf cars should be driven.
- Ensuring that proper warnings of driving hazards are displayed and visible.
- Who should and who should not drive golf cars.
- Instructing first time drivers.
- Maintaining golf cars in a safe driving condition.
- How various rules are to be enforced.

The safety committee should include all these items and such others as the committee feels necessary or appropriate.

# CONTROLS AND INDICATORS – ELECTRIC VEHICLES

**See General Warnings on page 15.**

## ⚠ WARNING

- **If renting or loaning the vehicle, make sure the driver is familiar with all controls and operating procedures before allowing the vehicle to be driven.**
- **Do not shift the Forward/Reverse switch while the vehicle is moving. To avoid injury to an unsuspecting passenger or damage to the vehicle, always bring the vehicle to a full stop before shifting the Forward/Reverse switch.**
- **Release the accelerator pedal and then press the brake pedal firmly until the vehicle stops. To avoid unintentionally starting or rolling the vehicle, set the park brake, place the Forward/Reverse switch in the NEUTRAL position, turn the key switch to the OFF position, and remove the key when leaving the vehicle.**

## KEY SWITCH

The key switch is mounted on the dash to the right of the steering column **(Figure 9)**. It has two positions, OFF and ON, which are clearly labeled. **See following NOTE.**

***NOTE:*** *When the key is turned to the OFF position, the main vehicle systems are disabled. The key switch may be used as an emergency stop.*

*The key can be removed only when the key switch is in the OFF position.*

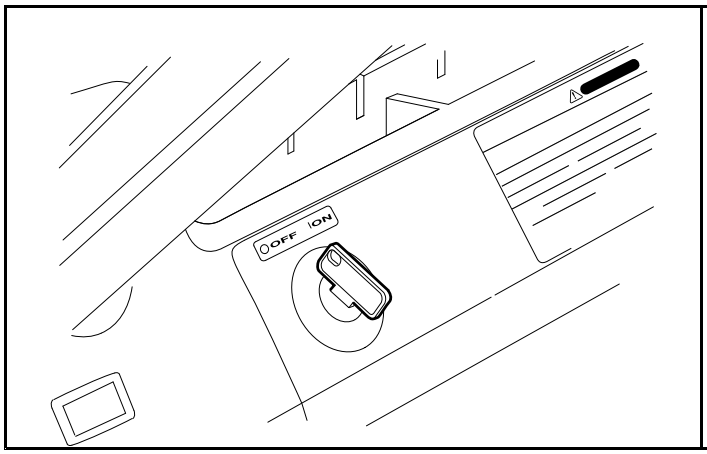


52

**Figure 9 Key Switch– Electric Vehicle**

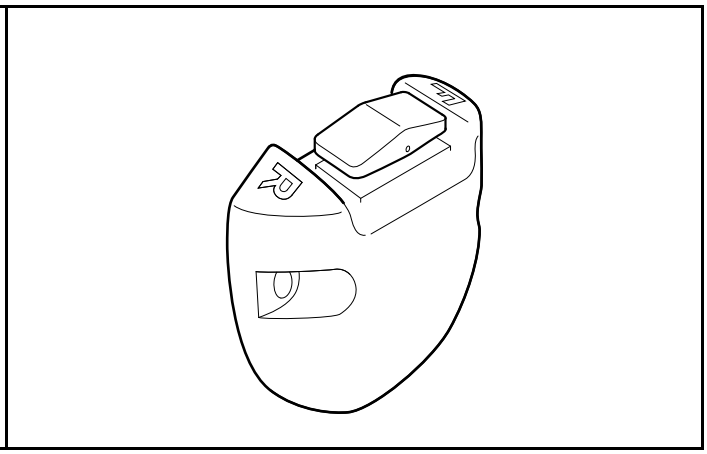

6

**Figure 10 Forward/Reverse Rocker Switch – Electric Vehicle**

## FORWARD/REVERSE CONTROL

The Forward/Reverse rocker switch is located on the seat support panel, below and to the right of the driver's right knee **(Figure 10, Page 22)**. The **F** (FORWARD) and **R** (REVERSE) are clearly marked. Push down the FORWARD side of the switch to operate the vehicle in the forward direction, or push down the REVERSE side of the switch to operate the vehicle in reverse. When the rocker switch is positioned in the NEUTRAL position, with neither side down, the vehicle will not operate if the accelerator pedal is pressed. The reverse buzzer will sound as a warning when the Forward/Reverse switch is in the REVERSE position.

## ACCELERATOR PEDAL

The accelerator pedal is the pedal on the right, with the word GO molded into it **(Figure 11)**. The operation of the accelerator pedal differs from that of an automobile. When the key switch is the ON position, and the Forward/Reverse switch is in either the FORWARD or REVERSE position, pressing the accelerator pedal will automatically release the park brake and start the vehicle moving in the direction selected (forward or reverse). As the accelerator pedal is pressed, speed will increase until full speed is reached. When the accelerator is released, power will be cut off and the motor will stop running.

Electric vehicles use a special electrical system, which employs motor braking in some modes of operation. In those modes, the vehicle operates as follows:

- **Walk Away Braking:** This feature prevents the vehicle from rolling away uncontrolled should the driver park on a slope and leave the vehicle without locking the park brake. The vehicle will roll at about 1 to 3 mph (1.6 to 4.8 km/h). If the walk away braking function remains engaged for two seconds or more, a warning buzzer will sound to alert the driver that motor braking has been activated. **See following WARNING.**

### ⚠ WARNING

- **Walk away braking will not limit vehicle speed to 3 mph (4.8 km/h) on very steep grades. Do not operate vehicle on slopes exceeding 20% grades.**

- **Motor Braking:** This feature helps to control vehicle downhill speed. When traveling downhill, motor braking engages to maintain speeds proportional to the accelerator pedal position. For example, when the accelerator is fully pressed, motor braking holds the vehicle at the programmed top speed. When the accelerator pedal is fully released, motor braking slows the vehicle to a complete stop or allows the vehicle to coast freely, depending upon the selected controller setting. This feature is selectable. Contact your local Club Car dealer/distributor to inquire about this feature. **See following WARNING.**

### ⚠ WARNING

- **When batteries are fully charged, a warning buzzer will sound during motor braking to alert the driver that motor braking is operating at a reduced level of performance. When this occurs, use the brake pedal to control vehicle speed.**

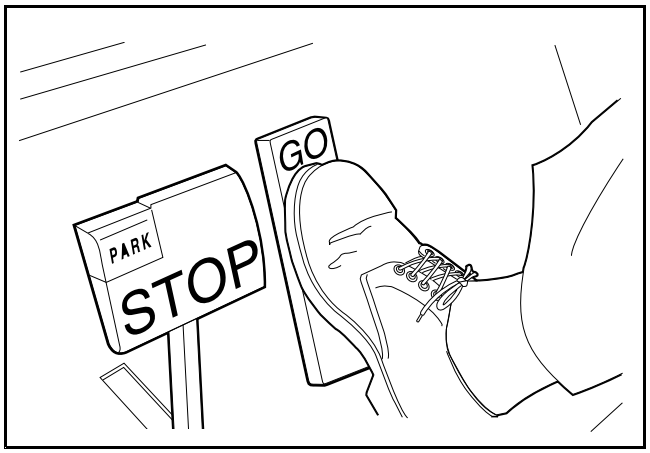


77

**Figure 11 Accelerator Pedal**

## BRAKE PEDAL

The brake pedal is the large pedal on the left with the word STOP molded into it. To slow or stop the vehicle, press the brake pedal with your foot **(Figure 12)**.

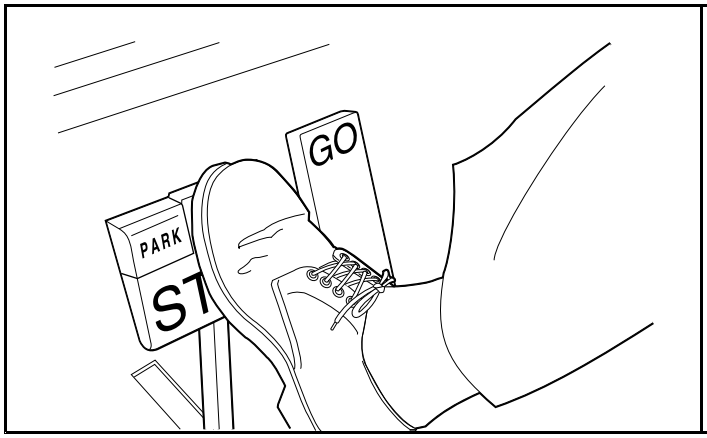


78

**Figure 12 Brake Pedal**

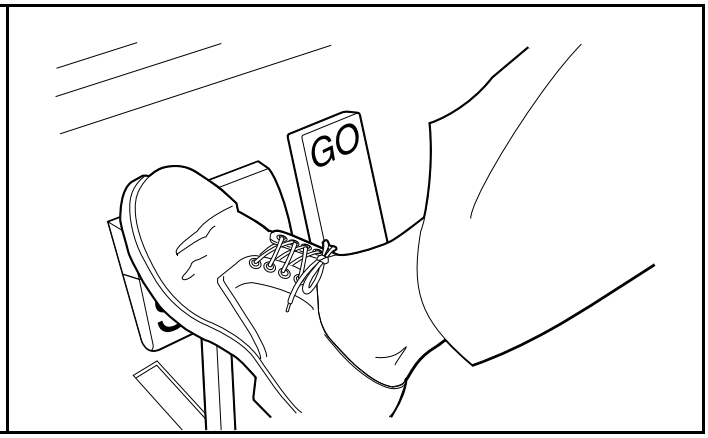


79

**Figure 13 Park Brake Pedal**

## PARK BRAKE PEDAL

The park brake pedal is the small raised portion in the upper left corner of the brake pedal. It has the word PARK molded into it. To set the park brake, press the brake pedal firmly and tilt the park brake portion of the pedal forward with your foot **(Figure 13)**. **See following WARNING and NOTE.**

### ⚠ WARNING

- **The park brake will release automatically when either the accelerator or brake pedal is pressed. The park brake has multiple locking positions and should be firmly engaged and locked to prevent the vehicle from rolling.**

## CHARGE INDICATOR LIGHT

Precedent ERIC charging system vehicles feature a dash-mounted charge indicator light below the steering column. The light serves two functions: 1) Battery low state-of-charge warning, and 2) Charging confirmation.

**Battery Low State-of-Charge Warning**

- The light comes on and remains solid when the battery state of charge falls below 20%.
- The light begins flashing when the battery state of charge falls below 10%.

## CAUTION

- **When the light indicates a low state of charge, the vehicle should be placed on charge as soon as possible.**

**Charging Confirmation**

- The light will flash three times and the reverse buzzer simultaneously will sound three times to indicate a battery charging session has begun.

## TOW–RUN SWITCH

## ⚠ WARNING

- **Place Tow-Run switch in the TOW position before disconnecting or connecting the batteries. Failure to heed this warning could result in a battery explosion or severe personal injury.**
- **When the Tow-Run switch is in the TOW position, all motor braking functions, including walk away braking, are disabled.**

The Precedent electric vehicles are equipped with a Tow–Run switch, located under the seat behind the batteries **(Figure 14)**. The switch must be in the RUN position in order to operate the vehicle. When the switch is in the TOW position, power to the vehicle electrical components is turned off and the vehicle will not operate. **See following NOTE.**

***NOTE:*** *After placing the Tow-Run switch in the TOW position, allow 10 seconds to elapse before switching back to the RUN position.*

*After placing the Tow–Run switch in the RUN position, allow 10 seconds to elapse before operating the vehicle.*

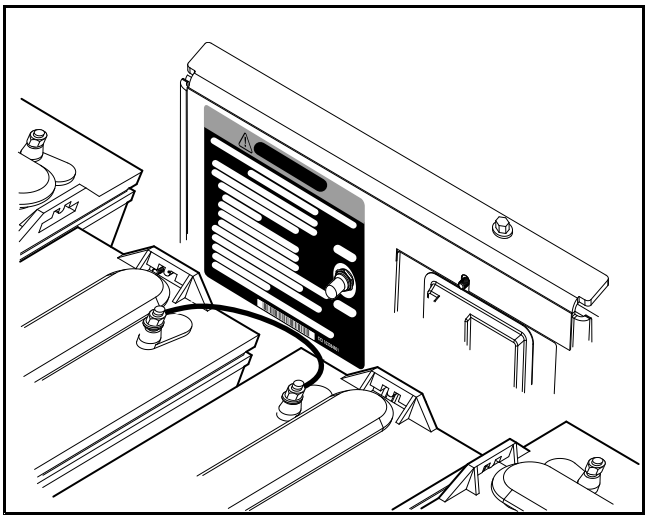

1381

**Figure 14 Tow–Run Switch**

The Tow-Run switch should be placed in the TOW position under the following conditions:

- **Before Towing the Vehicle:** Place the Tow–Run switch in the TOW position to disable all motor braking functions, thus preventing possible damage that could occur to the vehicle or electrical components if the vehicle is towed while the walk away braking motor braking function is operating.
- **Before Disconnecting or Connecting Battery Cables:** Place the Tow–Run switch in the TOW position to turn off power to the vehicle electrical system, thus preventing severe arcing and possible battery explosion as the battery cables are disconnected.
- **For Long Term Storage:** Place the Tow-Run switch in the TOW position to turn off power to the vehicle electrical system, thus preventing vehicle electrical components from discharging the batteries.

# CONTROLS AND INDICATORS – GASOLINE VEHICLES

**See General Warnings on page 15.**

## ⚠ WARNING

- **If renting or loaning the vehicle, make sure the driver is familiar with all controls and operating procedures before allowing the vehicle to be driven.**
- **Do not shift the Forward/Reverse handle while the vehicle is moving. To avoid injury to an unsuspecting passenger or damage to the vehicle, always bring the vehicle to a full stop before shifting the Forward/Reverse handle.**
- **Release the accelerator pedal and then press the brake pedal firmly until the vehicle stops. To avoid unintentionally starting or rolling the vehicle, set the park brake, place the Forward/Reverse handle in the NEUTRAL position, turn the key switch to the OFF position, and remove the key.**
- **Do not tamper with the governor. Doing so will void the warranty, as well as damage the engine and other components, and could result in property damage, personal injury, or death due to unsafe speed.**

## KEY SWITCH

The key switch is mounted on the dash to the right of the steering column **(Figure 15)**. It has two positions, OFF and ON, which are clearly labeled. **See following NOTE.**

***NOTE:*** *When the key is turned to the OFF position, the main vehicle systems are disabled. The key switch may be used as an emergency stop.*

*The key can be removed only when the key switch is in the OFF position.*

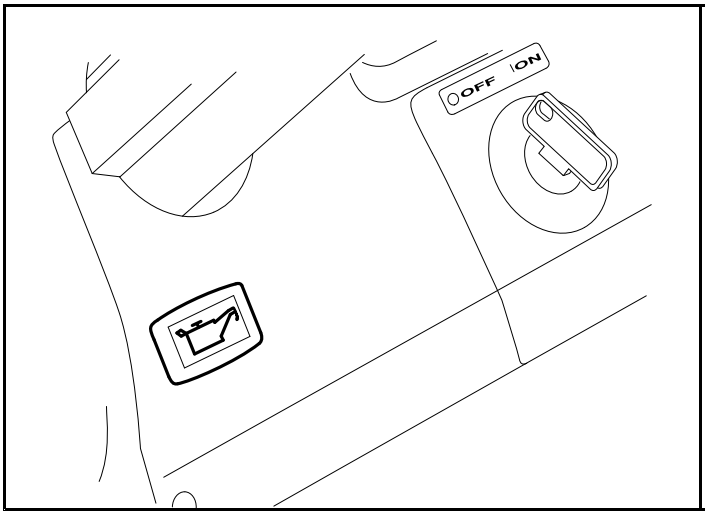


63

**Figure 15 Key Switch- Gasoline Vehicle**

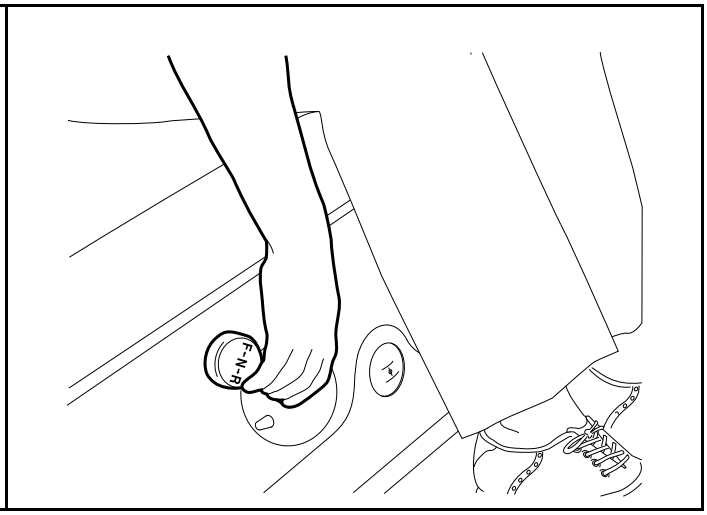


59

**Figure 16 Forward/Reverse Handle- Gasoline Vehicle**

## FORWARD/REVERSE CONTROL

The Forward/Reverse handle is located on the seat support panel, below and to the right of the driver's right knee **(Figure 16)**. The handle has three distinct positions: F (FORWARD), N (NEUTRAL), and R (REVERSE). Rotate the handle towards the driver (FORWARD) to operate the vehicle in the forward direction, or towards the passenger (REVERSE) to operate the vehicle in reverse. When the handle is in the straight up position, (NEUTRAL), the vehicle will not operate. The engine will stop if it is shifted to this position during operation. Club Car vehicles operate at

reduced speed in reverse. The reverse buzzer will sound as a warning when the Forward/Reverse handle is in the REVERSE position.

## ACCELERATOR PEDAL

The accelerator pedal is the pedal on the right, with the word GO molded into it **(Figure 17)**. The operation of the accelerator pedal differs from that of an automobile. When the key switch is in the ON position, and the Forward/Reverse handle is in either the FORWARD or REVERSE position, pressing the accelerator pedal will automatically release the park brake and start the vehicle moving in the direction selected (forward or reverse). As the accelerator pedal is pressed, speed will increase until full speed is reached. When the accelerator is released, power will be cut off and the motor will stop running.

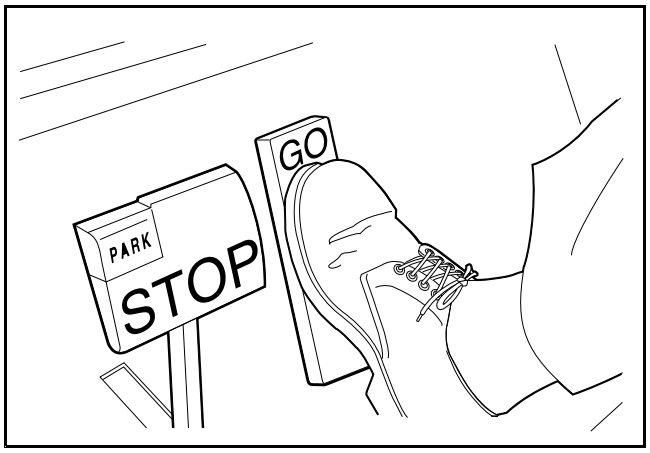


77

**Figure 17 Accelerator Pedal**

## BRAKE PEDAL

The brake pedal is the large pedal on the left with the word STOP molded into it. To slow or stop the vehicle, press the brake pedal with your foot **(Figure 18)**.

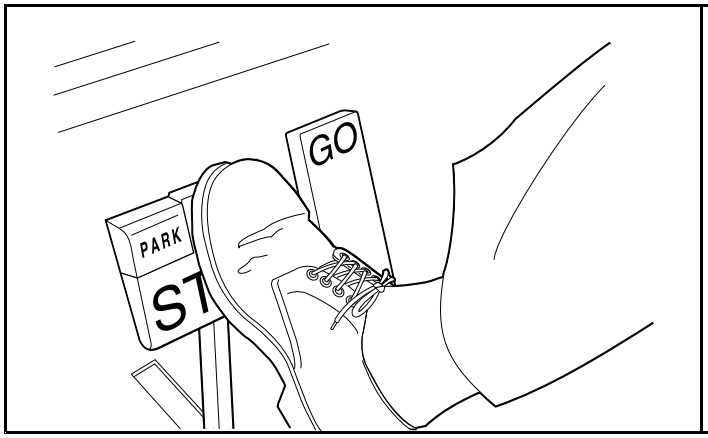


78

**Figure 18 Brake Pedal**

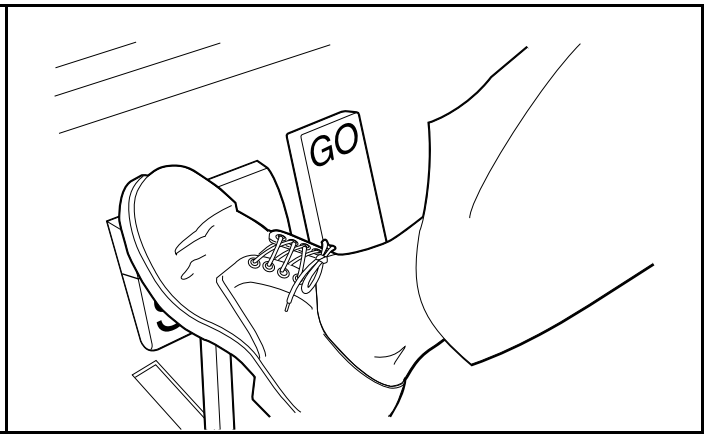


79

**Figure 19 Park Brake Pedal**

## PARK BRAKE PEDAL

The park brake pedal is the small raised portion in the upper left corner of the brake pedal. It has the word PARK molded into it. To set the park brake, press the brake pedal firmly and tilt the park brake portion of the pedal forward with your foot **(Figure 19)**. **See following WARNING and NOTE.**

## ⚠ WARNING

- **The park brake will release automatically when either the accelerator or brake pedal is pressed. The park brake has multiple locking positions and should be firmly pressed and locked to prevent the vehicle from rolling.**

## NEUTRAL LOCKOUT SWITCH

**Gasoline Vehicles Only**

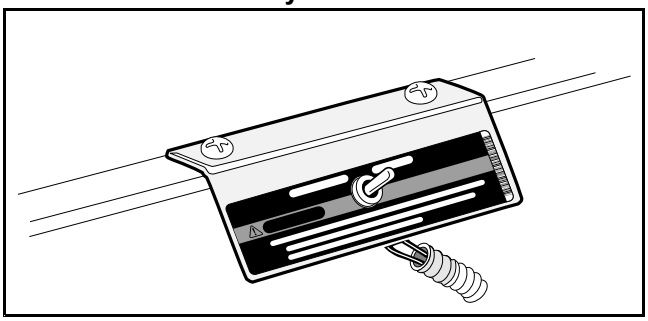

81

**Figure 20 Neutral Lockout Switch**

For the convenience of the trained technician, there is a neutral lockout switch located on the seat support panel under the seat **(Figure 20)**. The neutral lockout switch has two positions, MAINTENANCE and OPERATE, which are clearly marked.

When the switch is in the MAINTENANCE position, it will allow the technician to run the engine in the NEUTRAL position to perform certain maintenance and/or repair functions. With the switch in this position, the vehicle will not operate if the Forward/Reverse handle is placed in either the FORWARD or REVERSE position.

## ⚠ WARNING

- **With the switch in the MAINTENANCE position and the engine running, the vehicle may move suddenly if the Forward/Reverse handle is shifted or accidentally bumped. To prevent this, chock the front and rear wheels before servicing or leaving the vehicle.**

***NOTE:*** *Be sure to return the switch to the OPERATE position after servicing the vehicle, or it will not run with the Forward/Reverse handle in either the FORWARD or REVERSE position.*

## LOW OIL WARNING LIGHT

The gasoline golf car is equipped with a low oil warning light, located on the dash panel just below the steering column **(Figure 15, Page 27)**. If the warning light comes on, oil should be checked and added to the engine as necessary before continuing to use the vehicle. The vehicle should never be driven with the low oil warning light remaining on. If the warning light goes on and off, you may proceed, but oil should be added at the first opportunity. If the oil level is correct and the warning light stays on, have a trained technician check the vehicle. **See following CAUTION.** The light will flash repeatedly to indicate a possible problem with the electronic fuel injection (EFI) system.

## CAUTION

- **Failure to add oil immediately when the low oil warning light stays on may result in permanent engine damage.**

# PRE-OPERATION AND DAILY SAFETY CHECKLIST

Each Club Car vehicle has been thoroughly inspected and adjusted at the factory; however, upon receiving your new vehicle(s), you should become familiar with its controls, indicators, and operation. Carefully inspect each vehicle to ensure that it is in proper working condition before accepting delivery.

Use the following checklist as a guide to inspect the vehicle. This checklist should be used daily to ensure that the vehicle is in proper working condition and in conjunction with the Performance Inspection on page 30, and the Periodic Service Schedules on page 41. Any problems should be corrected by a Club Car distributor/dealer or a trained technician.

Any vehicle not functioning correctly should be removed from use until it is properly repaired. This will prevent further damage to the vehicle and avoid the possibility of injury due to unsafe conditions.

**All Vehicles**

- **General:** All the parts should be in place and properly installed. Be sure that all nuts, bolts, and screws are tight.
- **Safety and information decals:** Check to ensure that all safety and information decals are in place. **See Safety Decal and Feature Identification on page 7.**
- **Tires:** Visually inspect tires for wear, damage, and proper inflation on a daily basis. **See Vehicle Specifications on page 70.**
- **Performance Inspection:** Inspect as instructed. **See Performance Inspection on page 30.**

**Electric Vehicles**

- **Batteries:** Check electrolyte to ensure that it is at its proper level **(Figure 23, Page 52)**. Check battery posts. Wires should be tight and free of corrosion. Charge batteries fully before first use of vehicle.
- **Charger cord, plug, and receptacle:** Visually inspect for cracks, loose connections, and frayed wiring. **See Plug and Receptacle on page 57.**

## ⚠ WARNING

- **Be sure the plastic has been removed from the seat bottom before operating the vehicle. Failure to do so may result in a fire, property damage, personal injury, or death.**

**Gasoline Vehicles**

- **Side-Post Battery:** Check electrolyte to ensure it is at the proper level **(Figure 35, Page 63)**. Check battery posts. Wires should be tight and free of corrosion and battery should be fully charged.
- **Top-Post Battery:** Check battery posts. Wires should be tight and free of corrosion and battery should be fully charged. **(Figure 36, Page 63)**.
- **Engine:** Check for proper engine oil level.
- **Fuel:** Check fuel level. **See Fueling Instructions – Gasoline Vehicles on page 66**. Check fuel tank, lines, cap, pump, fuel filters, and fuel injector for fuel leakage.

## ⚠ WARNING

- **Be sure the plastic has been removed from the seat bottom before operating the vehicle. Failure to do so may result in a fire, property damage, personal injury, or death.**

## PERFORMANCE INSPECTION

After you have familiarized yourself with the vehicle controls and have read and understood the driving instructions, take the vehicle for a test drive.

Use the following checklist in conjunction with the Daily Pre-Operation and Safety Checklist as a guide to inspect the vehicle and check daily for proper operation. Any problems should be corrected by a Club Car distributor/dealer or a trained technician.

**All Vehicles**

- **Forward/Reverse switch:** Check for proper operation. **See Controls and Indicators – Electric Vehicles on page 22 or Controls and Indicators – Gasoline Vehicles on page 27.**
- **Brakes:** Be sure the brakes function properly. When brake pedal is pressed using moderate pressure, the vehicle should come to a smooth, straight stop. If the vehicle swerves or fails to stop, stops abruptly, or makes a grinding or squeaking noise, have the brake system checked and adjusted as required. Continued, moderate brake pedal pressure should be able to lock the wheels, but using lesser pressure should also permit a slow, gradual deceleration.
- **Park brake:** When latched, the park brake should lock the wheels and hold the vehicle stationary (on an incline of 20% or less). It should release when either the accelerator or brake pedal is pressed.
- **Reverse buzzer:** The reverse buzzer will sound as a warning when the Forward/Reverse handle or switch is in the REVERSE position.
- **Steering:** The vehicle should be easy to steer and should not have any play in the steering wheel.
- **General:** Listen for any unusual noises such as squeaks or rattles. Check the vehicle's ride and performance. Have a Club Car distributor/dealer or a trained technician investigate anything unusual.

**Electric Vehicles**

- **Accelerator:** With the key switch in the ON position and the Forward/Reverse switch in the FORWARD position, as the accelerator pedal is pressed, the motor should start and the vehicle should accelerate smoothly to full speed. When the pedal is released it should return to the original position. All Club Car vehicles operate at reduced speed in reverse.
- **Walk Away Braking:** With the vehicle parked on level ground and the park brake disengaged, place the Tow/Run switch in the RUN position and attempt to push the vehicle. Motor braking should engage and cause resistance to rolling ((moving at no more than 1 to 3 mph) (1.6 to 4.8 km/h)) with the Forward/Reverse switch in any position. When walk away motor braking is engaged, the reverse buzzer should emit a distinct pattern of beeps. **See following WARNING**.

## ⚠ WARNING

- **Walk Away Braking will not limit vehicle speed to 3 mph (4.8 km/h) on very steep grades. Do not operate vehicle on slopes exceeding 20% grades.**

- **Motor Braking:** Accelerate down an incline with the accelerator pedal fully pressed. When the vehicle reaches maximum programmed speed, motor braking should engage and limit the vehicle to its maximum programmed speed. On very steep grades, the vehicle may slightly exceed its maximum programmed speed, requiring the use of the brake pedal. Also, travel downhill with the accelerator pedal partially pressed. Motor braking should limit speed to less than top speed and maintain speeds proportional to the accelerator pedal position. On a level surface, accelerate the vehicle to full speed and then release the accelerator pedal. Motor braking should smoothly slow the vehicle to a complete stop or else allow the vehicle to coast freely, depending on the selected controller setting.

**Gasoline Vehicles**

- **Accelerator:** With the key switch in the ON position and the Forward/Reverse switch in the FORWARD position, as the accelerator pedal is pressed, the engine should start and the vehicle should accelerate smoothly to full speed. When the pedal is released it should return to the original position. All Club Car vehicles operate at reduced speed in reverse.
- **Governor:** Check maximum speed of the vehicle. The vehicle should operate at 12 to 15 mph (19 to 24 km/h) on a level surface.

***NOTE:*** *The 12 to 15 mph (19 to 24 km/h) is for fleet golf cars. There is an optional 19 mph (30 km/h) speed kit available for non-fleet golf cars, these vehicles should be set between 18.5 and 19.5 mph (29.7 and 31.3 km/h).*

# DRIVING INSTRUCTIONS

## ⚠ WARNING

- **Only licensed drivers should be allowed to drive the vehicle.**
- **If renting or loaning the vehicle, make sure the driver is familiar with all controls and operating procedures before allowing the vehicle to be driven.**
- **No more than two persons per bench seat should be on the vehicle at one time. Do not allow passenger to ride in the bag well.**
- **The vehicle is not specially equipped for handicapped persons. Be sure all persons can properly operate the vehicle prior to allowing them to drive the vehicle.**
- **Be sure all passengers are capable of securing themselves in a vehicle before allowing them to ride in one.**
- **For night use, the vehicle must be equipped with headlights and taillights.**
- **Stop the vehicle before shifting the Forward/Reverse switch. Failure to do so may result in injury to an unsuspecting passenger and (or) damage to the vehicle.**
- **To help avoid being struck, do not stand in front of or behind the vehicle.**
- **Operate the vehicle from the driver seat only.**
- **To help prevent falls from the vehicle, remain seated in a moving vehicle and hold on to hand holds or handrails at all times. Driver should keep both hands on the steering wheel when the vehicle is in motion.**
- **To help prevent the possibility of serious injury, keep your entire body inside the vehicle.**
- **Do not leave children unattended on vehicle.**
- **To help prevent overturning the vehicle, drive slowly straight up and down slopes. Avoid driving the vehicle on slopes exceeding 20% incline.**
- **To help avoid possible injury to an inattentive passenger and (or) damage to the vehicle, avoid sudden starts, sudden stops, and abrupt turns.**
- **To help avoid the possibility of losing control of or overturning the vehicle, reduce speed for adverse driving conditions such as wet grass or rough terrain.**
- **Do not use the vehicle on public roads. It is not designed or intended for street use and should not be licensed for use on public roads.**
- **Obey all local rules concerning golf cars.**
- **The vehicle should be driven in only specified areas by trained drivers.**
- **Do not drive while under the influence of alcohol, drugs, or medications.**
- **To prevent overturning the vehicle, drive slowly in turns.**
- **Use brakes to reduce speed when coasting downhill.**
- **This vehicle is not intended to be used where risk of falling objects exists. If your vehicle will be used in such an environment, contact your local dealer.**
- **Do not drive the vehicle under tree limbs, bridges, tunnels, or other objects that are less than 80 inches (203 cm) from the ground.**

No one should drive the vehicle without first being instructed in the proper operation and use of the vehicle's controls. An experienced operator should accompany each first-time driver on a test drive before allowing him/her to operate the vehicle alone.

To ensure safe operation of the vehicle, follow exactly and in order, all of the following procedures. Read and understand all instructions prior to driving the vehicle.

## STARTING THE VEHICLE

1. Study and understand controls.
2. Make sure everyone is seated and holding onto seat handles or handrails.
3. Read safety and information decals located on the vehicle.
4. Make sure wheels are turned in desired direction.
5. Turn the key to the ON position and make sure nothing is in your path.
6. Select direction by placing Forward/Reverse handle or switch in desired position (F = forward or R = reverse). A buzzer will sound as a warning when the Forward/Reverse handle or switch is in the REVERSE position.
7. Slowly press accelerator pedal. The park brake will release automatically and the vehicle will start to move. As the accelerator pedal is pressed, speed will increase until full speed is reached. **See following WARNING.**

### ⚠ WARNING

- **Operator must control vehicle speed when going downhill.**

**Electric vehicles:**

- **Pedal down or pedal up motor braking may be used to help control speed when going downhill; however, steep terrain or other conditions will require that pedal braking be used in conjunction with motor braking.**

**Gasoline Vehicles:**

- **Do not shift the vehicle out of forward while going downhill. If you do, you will not be able to shift into reverse or back into forward until stopped.**
- **Bring vehicle to a complete stop before changing shifter position, either from forward to reverse, or from reverse to forward.**
- **Press the brake pedal as necessary and partially press the accelerator when descending a hill. With the accelerator pedal partially pressed, the governor will cause the engine to assist the brakes in controlling downhill speed.**

***NOTE:*** *If the Forward/Reverse handle is shifted into the NEUTRAL position, power will be cut off and the engine will stop running.*

## STOPPING THE VEHICLE

### ⚠ WARNING

- **Driving through water may affect the brakes. After driving through water, check effectiveness of the brakes by gently pressing the brake pedal. If the vehicle does not slow down at the normal rate, continue to press the brake pedal until the brakes dry out and normal performance returns.**

## ⚠ CAUTION

- **When stopped on a hill, use the brake pedal to hold your position. Do not use the accelerator pedal to hold position.**

To stop the vehicle, release the accelerator pedal and press the brake pedal with your right foot until the vehicle comes to a complete stop.

### PARKING AND LEAVING THE VEHICLE

1. After coming to a complete stop, firmly press the park brake pedal until it locks and prevents the vehicle from rolling.
2. Turn the key switch to the OFF position and place the Forward/Reverse handle or switch in the NEUTRAL position. Remove the key when the vehicle is not in use.
3. **Electric vehicles only:** When the Tow/Run switch is in the RUN position, (with the Forward/Reverse switch or key switch in any position), the walk away braking function will prevent the vehicle from rolling at more than 1 to 3 mph (1.6 to 4.8 km/h) unless the accelerator is pressed. This prevents the possibility of a parked vehicle (with the park brake disengaged) rolling away too fast to be overtaken on foot.

## TOWING

## ⚠ WARNING

- **Do not tow the vehicle on public streets or highways.**
- **Use only approved Club Car tow bars.**
- **Turn the key switch to OFF and place the Forward/Reverse handle or switch in the NEUTRAL position before towing the vehicle.**
- **Electric vehicles only: Place the Tow/Run switch in the TOW position; otherwise, the vehicle will not roll while being towed.**
- **Extreme caution should be used when towing any vehicle.**
- **Do not exceed 5 mph (8 km/h) towing speed.**
- **Do not allow people in the vehicles being towed.**
- **Avoid sudden starts, sudden stops, and tight turns when towing.**
- **Avoid stopping on a hill when towing. If you must stop on a hill, avoid sudden starts or rolling backwards and stopping suddenly. Failure to heed this warning could cause the vehicle to overturn, possibly resulting in severe personal injury.**
- **Do not tow more than one Club Car vehicle with another Club Car vehicle. If more than one vehicle must be towed, an adequately powered vehicle (tractor or full sized truck) properly fitted, with a tow hitch height of 11 inches (28 cm) should be used. Only heavy-duty tow bars should be used for multi-vehicle towing. Never tow more than five vehicles at one time.**
- **Stay clear from the area between the tow vehicle and the towed vehicle or trailer.**

A light duty tow bar is available for break-down towing and single vehicle towing. A heavy duty tow bar and an onboard tow bar are available for multi-vehicle towing. Observe all of the previous WARNING statements when towing.

## TRANSPORTING ON A TRAILER

### ⚠ WARNING

- **For use on public roads, the trailer must meet all federal, state, and local requirements such as taillights, brake lights, etc.**
- **Do not tow a Club Car vehicle behind a passenger vehicle or truck on a public road unless it is on an approved trailer.**
- **The vehicle to be towed should be tied securely to the trailer, with the Forward/Reverse handle or switch in the NEUTRAL position, the key switch the OFF position, and the park brake firmly pressed and locked to prevent movement.**
- **Do not allow people in the trailer or vehicle being towed.**
- **Avoid sudden starts, sudden stops, and tight turns when towing.**
- **Avoid stopping on a hill when towing. If you must stop on a hill, avoid sudden starts or rolling backwards and stopping suddenly. Failure to heed this warning could cause the vehicle to overturn, possibly resulting in severe personal injury.**
- **When towing on a trailer, normal road speed of the tow vehicle should be reduced.**
- **Because of the added length of the trailer, use caution when making turns.**
- **Remove the vehicle windshield and secure the seat bottom before transporting on a trailer.**
- **Stay clear from the area between the tow vehicle and the towed vehicle or trailer.**

If the vehicle must be transported over long distances or on public highways, it should be transported on an approved trailer that has the approved load rating of 1200 lb (544 kg) per vehicle being transported.

***NOTE:*** *A two-car trailer should be rated at 2 x 1200 lb (544 kg) = 2400 lb (1088 kg).*

## STORAGE – ELECTRIC VEHICLE

**See General Warnings on page 15.**

### ⚠ WARNING

- **Turn the key switch to the OFF position, remove the key, and leave the Forward/Reverse switch in the NEUTRAL position during storage. Place Tow/Run switch in the TOW position. This is to prevent unintentionally starting the vehicle or a fire hazard.**
- **Do not attempt to charge frozen batteries or batteries with bulged cases. Discard the battery. Frozen batteries can explode.**

### ⚠ CAUTION

- **Batteries in a low state of charge will freeze at low temperatures.**
- **To avoid exposing electrical components to moisture and subsequent damages, do not use any type of pressure washing or steam cleaning equipment to wash the vehicle.**

## PREPARING THE ELECTRIC VEHICLE FOR EXTENDED STORAGE

### Check Battery Water Levels Two Weeks Prior to Storage

Check water levels at least two weeks prior to winter storage to ensure proper mixing of water and electrolyte. Note that it takes approximately five charge cycles with a minimum of 10 amp hours removed after each charge to properly mix the water with electrolyte. Do NOT water batteries immediately prior to storage because this will not provide sufficient charge time to mix the water with the electrolyte. Freezing can occur when batteries are stored in this condition.

1. Check the water levels in each battery cell. If water is required, fill the cells to cover the plates, charge the batteries, and then use distilled water to fill each cell to the correct level. Electrolyte level should be from 0.5 inch (13 mm) above plates to 0.25 inch (6 mm) below the level indicator **(Figure 23)**.

**Immediately Prior to Storage, Perform the Following Steps**

1. Unload the vehicle so that tires are supporting only the weight of the vehicle.
2. Turn the key switch to the OFF position, remove the key, and leave the Forward/Reverse switch in the NEUTRAL position during storage.
3. If so installed, turn off all accessories, including GPS units, fans, etc.
4. Place the Tow/Run switch in the TOW position.

***NOTE:*** *All functions of the dash-mounted charge indicator light are disabled when the Tow/Run switch is in the TOW position.*

*If Visage or Guardian units are installed on vehicles and remote monitoring will be used during the storage period, make sure the Tow/Run switch remains in the RUN position rather than in the TOW position required for all other vehicles during storage.*

5. Batteries should be clean and free of corrosion. Wash tops and terminals of batteries with a solution of baking soda and water; use 1 cup (237 mL) baking soda per 1 gallon (3.8 L) of water. Rinse solution off batteries. Do not allow this solution to enter the batteries. Let the terminals dry and then coat them with Battery Terminal Protector Spray.
6. Tighten all battery cable connections to 110 in·lb (12.4 N·m).
7. Store vehicle in a cool, dry place. This will minimize battery self-discharge.
8. Adjust tires to recommended tire pressure.
9. Perform semiannual periodic lubrication.
10. Thoroughly clean front body, rear body, seats, battery compartment, and underside of vehicle.
11. Do not engage the park brake. Chock the wheels to prevent the vehicle from rolling.

***NOTE:*** *It is recommended that the vehicles be plugged in and the electrolyte level maintained throughout the storage period. If any of the following conditions exist, however, then disconnect the batteries for storage: 1) The charger cannot remain plugged in, 2) AC power will not be available during extended storage, or 3) Electrolyte levels will not be maintained. To disconnect batteries for storage, go to step 13.*

12. To keep batteries fully charged during storage:
    12.1. Plug the battery charger into the car. Leave battery chargers plugged in during storage. The charger will automatically activate when necessary.
    12.2. Check the electrolyte level and charger function monthly to ensure that proper operation is maintained. The charger is functioning properly if the blue light is ON and the triangular light is OFF.

## CAUTION

- **Be sure to check the batteries and charger monthly to maintain correct battery water level and to ensure the charger is operating correctly during storage.**

13. If disconnecting the batteries for storage, disconnect B negative (-) battery cable and secure it in a way that ensures the cable will not come into contact with battery terminal.

### RETURNING THE STORED ELECTRIC VEHICLE TO SERVICE

1. If necessary, connect batteries. **See Connecting the Batteries – Electric Vehicles on page 18.**
2. Fully charge batteries.

#### ⚠ WARNING

- **Do not attempt to charge frozen batteries or batteries with bulged cases. Discard the battery. Frozen batteries can explode.**

3. Adjust tires to recommended tire pressure.
4. Perform the **See Pre-Operation and Daily Safety Checklist on page 30.** Perform the Performance Inspection on page 30.

## STORAGE – GASOLINE VEHICLE

**See General Warnings on page 15.**

#### ⚠ DANGER

- **Do not attempt to drain fuel when the engine is hot or while it is running.**
- **Be sure to clean up any spilled gasoline before operating the vehicle.**
- **Store fuel in an approved fuel container only. Store in a well-ventilated area away from sparks, open flames, heaters, or heat sources.**
- **Keep fuel out of the reach of children.**
- **Do not siphon fuel from the vehicle.**

#### ⚠ WARNING

- **Turn the key switch to the OFF position, remove the key, and leave the Forward/Reverse handle in the NEUTRAL position during storage. This is to prevent unintentionally starting the vehicle or a fire hazard.**

#### ⚠ CAUTION

- **Batteries in a low state of charge will freeze at low temperatures.**

### PREPARING THE GASOLINE VEHICLE FOR EXTENDED STORAGE

1. Unload the vehicle so that tires are supporting only the weight of the vehicle.
2. Store vehicle in a cool, dry place. This will minimize battery self-discharge. If the battery appears to be weak, have it charged by a trained technician. Use an automotive-type 12-volt battery charger rated at 10 amps or less.
3. Seal the fuel tank.
   - 3.1. Fill fuel tank, and, following manufacturer's directions, add a commercially available fuel stabilizer (such as Sta-Bil®).
   - 3.2. Disconnect fuel vent line from fuel tank vent nipple.

3.3. Plug the fuel tank vent nipple so that it is air tight. We recommend using a slip-on vinyl cap.

***NOTE:*** *It is not necessary to drain the fuel line.*

4. Disconnect battery and spark plug wire(s). **See Side-Post Battery: Disconnecting the Battery-Gasoline Vehicles on page 17.**
   **See Top-Post Battery: Disconnecting the Battery-Gasoline Vehicles on page 17.**
5. Battery should be clean and free of corrosion. Wash top and terminals of battery with a solution of baking soda and water (1 cup (237 mL) baking soda per 1 gallon (3.8 L) of water). Rinse solution off battery. Do not allow this solution to enter the battery. Let the terminals dry and then coat them with Battery Terminal Protector Spray (CC P/N 1014305).
6. To protect the engine, remove spark plug and pour 0.5 fl-oz (14.2 mL) of SAE 10 weight oil into the engine through the spark plug hole. Rotate engine crankshaft by hand several times and then install the spark plug and tighten it to 18 ft·lb (24.5 N·m).
7. Adjust tires to recommended tire pressure. **See Vehicle Specifications on page 70.**
8. Perform semiannual periodic lubrication. **See Periodic Lubrication Schedules on page 45.**
9. Thoroughly clean front body, rear body, seats, engine compartment, and underside of vehicle.
10. Do not engage the park brake. Chock the wheels to prevent the vehicle from rolling.

## RETURNING THE STORED GASOLINE VEHICLE TO SERVICE

1. Restore the fuel systems to operation.
   1.1. Remove the plug from the fuel tank vent.
   1.2. Connect the vent tube to the fuel tank vent.
2. Connect battery and spark plug wire(s). **See Side-Post Battery: Connecting the Battery-Gasoline Vehicles on page 17.**
   **See Top-Post Battery: Connecting the Battery-Gasoline Vehicles on page 18.**
3. Place the Forward/Reverse handle in the NEUTRAL position and the neutral lockout switch in the MAINTENANCE position. Crank the engine until fuel is pumped into the fuel injector and fuel lines and the engine starts. Turn the engine off and return the neutral lockout switch to the OPERATE position. **See following NOTE.**

***NOTE:*** *Due to the oil added to the engine in preparation for storage, engine may smoke excessively for a short time when it is run for the first time after storage.*

4. Adjust tires to recommended tire pressure. **See Vehicle Specifications on page 70.**
5. Perform the Pre-Operation and Daily Safety Checklist on page 30 and the Performance Inspection on page 30.

# MAINTENANCE

**See General Warnings on page 15.**

To ensure trouble-free vehicle performance, it is very important to follow an established preventive maintenance program. Regular and consistent vehicle maintenance can prevent vehicle downtime and expensive repairs that can result from neglect. Use the Pre-Operation and Daily Safety Checklist beginning on page 30, the Performance Inspection, and the following Periodic Service Schedules and Periodic Lubrication Schedules to keep the vehicle in proper working condition.

Any vehicle not functioning correctly should be removed from use until it is properly repaired. This will prevent further damage to the vehicle and avoid the possibility of injury due to unsafe conditions.

Contact your local Club Car distributor/dealer to perform all repairs and semiannual and annual periodic service.

## ⚠ WARNING

- **If any problems are found during scheduled inspection or service, do not operate the vehicle until repairs are made. Failure to make necessary repairs could result in fire, property damage, severe personal injury, or death.**
- **Only trained technicians should service or repair the vehicle or battery charger. Anyone doing even simple repairs or service should have knowledge and experience in electrical and mechanical repair. The appropriate instructions must be used when performing maintenance, service, or accessory installation.**

**Electric vehicles:**

- **Hot! Do not attempt to service hot motor. Attempting to do so could cause severe burns.**
- **To avoid unintentionally starting the vehicle, disconnect the batteries and discharge the controller. See Disconnecting the Batteries – Electric Vehicles on page 18.**

**Gasoline vehicles:**

- **Moving parts: Do not attempt to service gasoline vehicle while the engine is running.**
- **Hot! Do not attempt to service hot engine or exhaust system. Failure to heed this warning could result in severe burns.**
- **To avoid unintentionally starting the vehicle, disconnect battery and spark plug wire(s). See Side-Post Battery: Disconnecting the Battery-Gasoline Vehicles on page 17.**
  **See Top-Post Battery: Disconnecting the Battery-Gasoline Vehicles on page 17.**
- **Frame ground – Do not allow tools or other metal objects to contact frame when disconnecting batteries or other electrical wiring. Never allow a positive wire to touch the vehicle frame, engine, or other metal component.**

# PERIODIC SERVICE SCHEDULES

## ⚠ WARNING

- **Service, repairs, and adjustments must be made per instructions in the maintenance and service manual.**

***NOTE:*** *If the vehicle is constantly subjected to heavy use or severe operating conditions, the preventive maintenance procedure should be performed more often than recommended in the periodic service and lubrication schedules.*

*Both the Periodic Service Schedule and Periodic Lubrication Schedule must be followed to keep vehicle in optimum operating condition.*

| **PERIODIC SERVICE SCHEDULE – ELECTRIC VEHICLES** | | |
|---|---|---|
| **REGULAR INTERVAL** | **SERVICE** | |
| **Daily service by owner** | Pre-Operation and Daily Safety Checklist | **See Pre-Operation and Daily Safety Checklist on page 30.** |
| | Performance Inspection | **See Performance Inspection on page 30.** |
| | Batteries | Charge batteries (after each daily use only). |
| **Weekly service by owner** | Batteries (For vehicles NOT equipped with the Single-Point Watering System and Low Maintenance Batteries) | Check electrolyte level. Add water if necessary. **See Battery Care – Vehicles Without the Single-Point Watering System (SPWS) on page 51.** |
| **Monthly service by owner or trained technician** | Batteries (For vehicles equipped with the Single-Point Watering System). Water monthly or according to the established watering interval. | Water the batteries. Observe that water flow occurs and no water overflows from any cell. **See Battery Care – Vehicles Equipped with the Single-Point Watering System (SPWS) on page 50.** |
| | Batteries | Wash battery tops and clean terminals with baking soda/water solution. Apply Battery Terminal Protector Spray (CC P/N 1014305) to battery terminals. |
| | Tires | Check air pressure and adjust if necessary. **See Vehicle Specifications on page 70.** |
| | General vehicles | Thoroughly wash vehicle including the underside. |
| **Initial (one-time) inspection by owner or trained technician after six weeks of use** | Batteries (For vehicles newly equipped with the Single Point Watering System) | For vehicles newly equipped with the SPWS, manually check battery electrolyte levels of all cells to verify correct valve operation. **See page 47.** |

**TABLE CONTINUED ON NEXT PAGE**

| **PERIODIC SERVICE SCHEDULE – ELECTRIC VEHICLES** | | |
|---|---|---|
| **REGULAR INTERVAL** | **SERVICE** | |
| **Semiannual service by trained technician only (every 50 hours of operation or 100 rounds of golf)** | Brake system | Check brake shoes; replace if necessary. |
| | | Lubricate brake system per Lubrication Schedule. |
| | | Check brake cables for damage; replace if necessary. |
| | | Check brake cable equalizer adjustment; adjust if necessary. |
| | Electrical wiring and connections | Check for tightness and damage; replace if necessary. |
| | Front wheel alignment and camber | Check and adjust as required. **See Section 7 – Steering and Front Suspension in the appropriate maintenance and service manual.** |
| **Annual service by owner or trained technician (every 100 hours of operation or 200 rounds of golf)** | Batteries (For vehicles equipped with the Single Point Watering System) | Manually check battery electrolyte levels of all cells to verify correct valve operation. **See page 47.** |
| | Safety decals | Check safety decals. Replace if damaged or illegible. |
| **Annual service by trained technician only (every 100 hours of operation or 200 rounds of golf)** | Batteries | If batteries are not performing as expected, see Batteries in the maintenance and service manual. |
| | Pedal group | Lubricate all rotating joints. **See Periodic Lubrication Schedules on page 45.** |
| | General vehicle | Check for loose hardware; tighten if necessary. Refer to the appropriate maintenance and service manual. |

| PERIODIC SERVICE SCHEDULE – GASOLINE VEHICLES | | |
|---|---|---|
| **REGULAR INTERVAL** | **SERVICE** | |
| **Daily service by owner** | Pre-Operation and Daily Safety Checklist | **See Pre-Operation and Daily Safety Checklist on page 30.** |
| | Performance Inspection | **See Performance Inspection on page 30.** |
| **Monthly service by owner or trained technician** | Engine | Check engine oil level; change if necessary. Properly dispose of used oil. **See Periodic Lubrication Schedules on page 45.** |
| | | Check engine cooling air intake; clean if necessary. Visually inspect the unshrouded area around engine exhaust for grass and debris, and clean if necessary. |
| | Tires | Check air pressure and adjust as necessary. **See Vehicle Specifications on page 70.** |
| | General vehicle | Wash engine compartment and underside of vehicle. Do not wash engine when hot. |
| **Semiannual service by trained technician only (every 50 hours of operation or every 100 rounds of golf)** | Battery | Clean terminals and wash dirt from casing; Apply Battery Terminal Protector Spray (CC P/N 1014305) to battery terminals; For Side–Post battery, check electrolyte level. |
| | Front wheel alignment and camber | Check and adjust if necessary. **See Section 7 – Steering and Front Suspension in the appropriate maintenance and service manual.** |
| | Electrical wiring and connections | Check for tightness and damage; replace if necessary. |
| | Brake system | Check brake shoes; replace if necessary. |
| | | Lubricate brake system per Lubrication Schedule. |
| | | Check brake cables for damage; replace if necessary. |
| | | Check brake cable equalizer adjustment; adjust if necessary. |

**TABLE CONTINUED ON NEXT PAGE**

| PERIODIC SERVICE SCHEDULE – GASOLINE VEHICLES | | |
|---|---|---|
| **REGULAR INTERVAL** | **SERVICE** | |
| **Annual service by trained technician only (every 100 hours of operation or every 200 rounds of golf)** | Engine | Check for leaks around gaskets, fill plugs, etc. |
| | | Inspect, clean and regap spark plug; replace if necessary. |
| | Engine air intake system | Check air filter element; replace if necessary. |
| | | Check clamps for tightness; check hose for cracks. |
| | Pedal group | Lubricate all rotating joints. **See Periodic Lubrication Schedules on page 45.** |
| | General vehicle | Check for loose hardware; tighten if necessary. Refer to the appropriate maintenance and service manual. |
| | Safety decals | Check safety decals. Replace if damaged or illegible. |
| **Two year service by trained technician only (every 200 hours of operation or every 400 rounds of golf)** | Engine | Check and adjust valve lash as needed. |

## ⚠ WARNING

- **If any problems are found during scheduled inspection or service, do not operate the vehicle until repairs are made. Failure to make necessary repairs could result in fire, property damage, severe personal injury, or death.**

# PERIODIC LUBRICATION SCHEDULES

| PERIODIC LUBRICATION SCHEDULE – ELECTRIC VEHICLES | | | |
|---|---|---|---|
| **REGULAR INTERVAL** | **SERVICE** | **LUBRICATION POINTS** | **RECOMMENDED LUBRICANT** |
| **Semiannually by owner or trained technician (every 50 hours of operation or 100 rounds of golf)** | Charger receptacle | 1 | WD-40® |
| | Brake system, per maintenance and service manual. | 2 | Dry Moly Lube (CC P/N 1012151), white lithium grease NLGI #2 |
| | Front suspension (two fittings) | 3 | Chassis Lube - EP NLGI Grade 2 |
| **Annually by trained technician only (every 100 hours of operation or 200 rounds of golf)** | Check/fill transaxle to plug level | 4 | 22 fl-oz (0.67 L) SAE 30 WT. API Class SE, SF, or SG Oil (or higher) |
| | Pedal group (as required) | 5 | Dupont™ Performance Dry Multi-Use Lubricant |

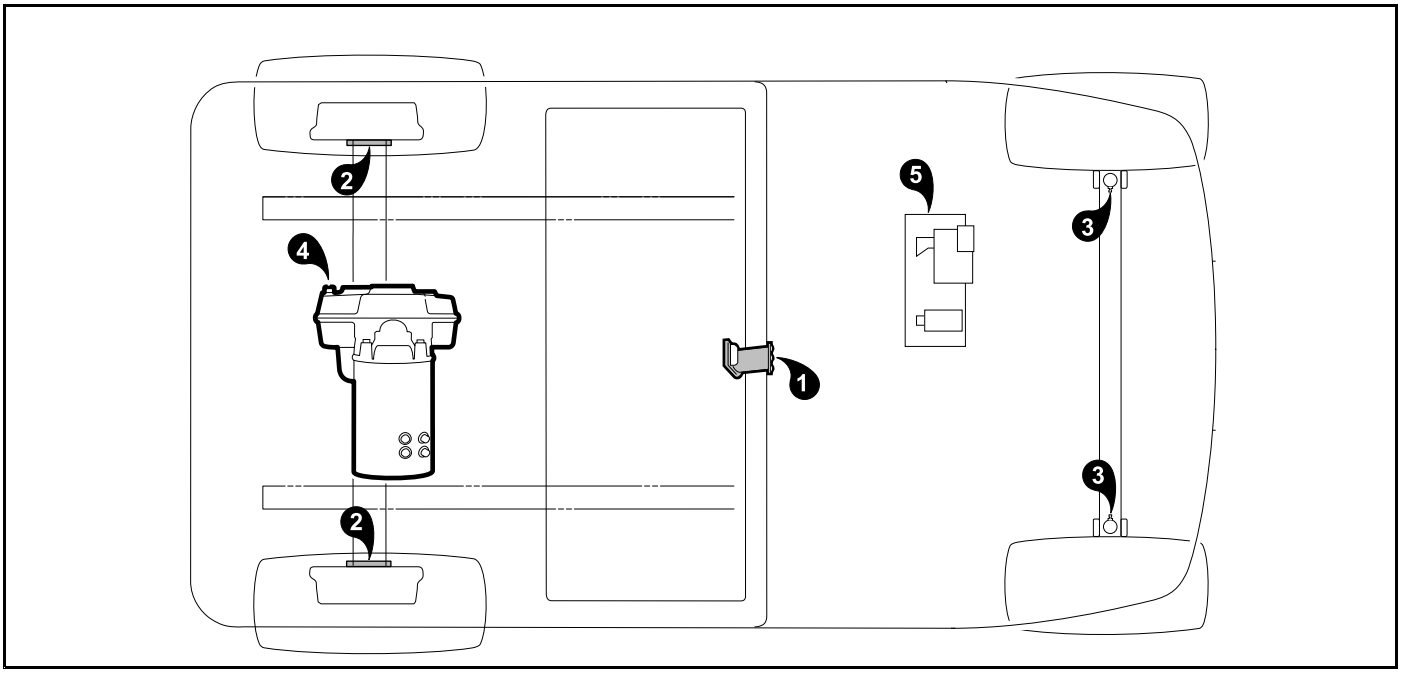


64

**Figure 21 Lubrication Points – Electric Vehicles**

| PERIODIC LUBRICATION SCHEDULE – GASOLINE VEHICLES | | | |
|---|---|---|---|
| **REGULAR INTERVAL** | **SERVICE** | **LUBRICATION POINTS** | **RECOMMENDED LUBRICANT** |
| **Semiannually by owner or trained technician (every 50 hours of operation or every 100 rounds of golf)** | Shifter cable pivots | 1 | Dry Moly Lube (CC P/N 1012151) |
| | Brake system, per maintenance and service manual. | 2 | Dry Moly Lube (CC P/N 1012151), white lithium grease NLGI #2 |
| | Front suspension (two fittings) | 3 | Chassis Lube - EP NLGI Grade 2 |
| **Annually by trained technician only (every 100 hours of operation or every 200 rounds of golf)** | **Transaxle:** Check/fill to plug level | 4 | 67.6 fl-oz (2.0 L) 80–90 WT. API Class GL or 67.6 fl-oz (2.0 L) 80–90 WT. AGMA Class 5 EP Gear Lubricant |
| | Pedal group (as required) | 5 | Dupont™ Performance Dry Multi-Use Lubricant |
| **First change 100 hours – additional change every 200 hours of operation or annually, whichever comes first** | Change engine oil | 6 | 40 fl-oz (1.2 L) 10W-30 or 5W-30 grade SE or higher. **See also Figure 39, Page 66.** |

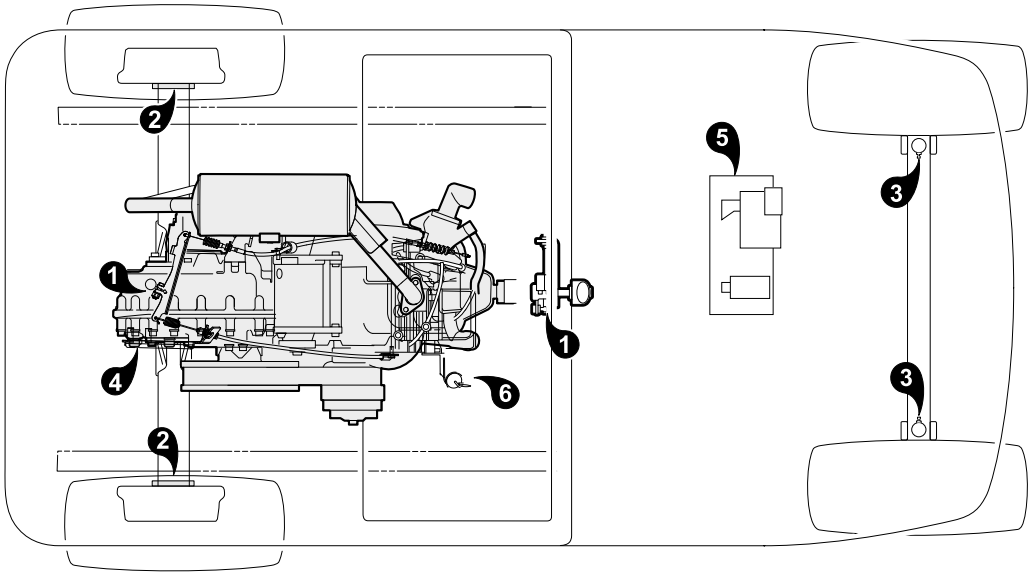


3117

**Figure 22 Lubrication Points – Gasoline Vehicles**

# BATTERIES – ELECTRIC VEHICLES

**See General Warnings on page 15.**

## ⚠ DANGER

- **Battery – Explosive gases! Do not smoke. Keep sparks and flames away from the vehicle and service area. Ventilate when charging or operating vehicle in an enclosed area. Wear a full face shield and rubber gloves when working on or near batteries.**
- **Charge batteries in a well-ventilated area only. Batteries emit hydrogen while being charged. Hydrogen is an explosive gas and must never exceed a level of 2% of the air.**
- **Battery – Poison! Contains acid! Causes severe burns. Avoid contact with skin, eyes, or clothing. Antidotes:**
  - **External: Flush with water. Call a physician immediately.**
  - **Internal: Drink large quantities of milk or water followed with milk of magnesia or vegetable oil. Call a physician immediately.**
  - **Eyes: Flush with water for 15 minutes. Call a physician immediately.**

## ⚠ WARNING

- **Wear safety glasses or approved eye protection when servicing the vehicle or battery charger. Wear a full face shield and rubber gloves when working on or near batteries.**
- **Use insulated tools when working near batteries or electrical connections. Use extreme caution to avoid shorting of components or wiring.**

## CAUTION

- **On all vehicles, turn off all accessories before charging batteries.**

***NOTE:*** *Recycle or dispose of discarded batteries in accordance with local, state, and federal regulations.*

Club Car electric vehicles use deep-cycle batteries. Automotive batteries should never be used in electric vehicles.

New batteries will not deliver their full capabilities until they have been discharged and recharged 20 to 50 times. To obtain the maximum service life from new batteries, restrict electric vehicles with new batteries to 40 to 50 amp hours or 36 holes of golf or (40 minutes of private use) between charges in the first two months of operation. Batteries should be fully charged before first use of new vehicle, before first use of a vehicle after storage, and before releasing vehicle for use each day.

### WATER QUALITY

Water purity is the most important factor in the performance and life span of the vehicle batteries. Club Car is, therefore, placing increased importance on battery water quality.

Outlined below are four battery watering procedures, grouped into two categories: Preferred and Alternate methods. Club Car recommends the use of a deionizer or distilled water. Alternate methods of reverse osmosis or tap water are allowable but should be avoided since water quality can change from day to day depending on additives, water main leaks, etc.

**Preferred Methods**

- **Distilled Water:** Distilled water is the most common type of water used in batteries. Distilled water is created by boiling water, collecting the steam, and allowing the steam to condense back into water. The distilling process results in water that is free of minerals that can lead to the degradation of battery performance and life.
- **Deionized Water:** Deionized water is created by inducing electrically charged resins that attract and bind to sodium, calcium, iron, copper, chloride, and bromide ions. The result of this electrical filtering is purified water, which contains little to no mineral ions. To make sure the deionized water remains at a high quality, replace the filter in the deionizer per the manufacturer's recommendations.
- **Deionized Systems:** The Service Parts Department at Club Car offers two different deionizer systems: one for vehicles equipped with the Single Point Watering System (SPWS), and for vehicles without SPWS, CC P/N 105166801.

**Alternate Methods**

- **Reverse Osmosis:** Reverse osmosis involves forcing water through a membrane that allows water to pass while trapping solids. The choice of membrane used determines the amount of solids or impurities that get trapped and hence the purity quality of the filtered water. In addition, the usage frequency of the membrane can also contribute to the filtered water quality. Due to the variance in water quality consistency, Club Car recommends the use of the deionizer or distilled water.
- **Tap Water:** While the use of tap water without filtering is an alternate method of battery watering, its use should be limited due to the levels of dissolved minerals and chemicals that can degrade battery performance and life. If unfiltered tap water is used, regular water analyses must be conducted to check for impurities. The following chart lists the maximum allowable minerals, solids, and contaminates in parts per million and their impact on battery performance. Water testing, however, is expensive, and water quality can change from day to day depending on additives, water main leaks, etc. Due to the cost and labor of performing water quality tests, Club Car recommends the use of distilled water or a deionizer.

| IMPURITY | ALLOWABLE CONTENT (PARTS PER MILLION) | EFFECTS OF IMPURITY |
|---|---|---|
| Suspended matter | Trace | N/A |
| Total solids | 100.0 | N/A |
| Organic and volatile matter | 50.0 | Corrosion of positive plates |
| Ammonia | 8.0 | Slight self-discharge of both plates |
| Antimony | 5.0 | Self-discharge, reduces life, lower on-charge voltage |
| Arsenic | 0.5 | Self-discharge, can form poisonous gas |
| Calcium | 40.0 | Increase of positive plate shedding |
| Chloride | 5.0 | Loss of capacity in plates, greater loss in positive plates |
| Copper | 5.0 | Increased self-discharge, lower on-charge voltage |
| Iron | 3.0 | Increased self-discharge, lower on-charge voltage |
| Magnesium | 40.0 | Reduced life |
| Nickel | None allowed | Intense lowering of on-charge voltage |
| Nitrates | 10.0 | Increased sulfation of negative plate |

**TABLE CONTINUED ON NEXT PAGE**

| IMPURITY | ALLOWABLE CONTENT (PARTS PER MILLION) | EFFECTS OF IMPURITY |
|---|---|---|
| Nitrites | 5.0 | Plate corrosion, loss of capacity, reduced life |
| Platinum | None allowed | Violent self-discharge, lower on-charge voltage |
| Selenium | 2.0 | Positive plate shedding |
| Zinc | 4.0 | Slight self-discharge of negative plates |

## DEIONIZER

***NOTE:*** *Deionizer systems for SPWS configured fleets became standard with Model Year 2014 fleet golf orders.*

**Regular Maintenance**

This system requires regular preventative maintenance on at least a quarterly basis.

- Check all screens and/or filters on water supplies. Clean or replace all filters / line strainers as necessary. Failure to do so can cause a reduction in the water pressure and flow rates needed to operate the system properly. A filter screen can be found on the inlet of all regulators, and a line strainer on all supply hoses. Be sure to replace the deionizer filter cartridge as indicated by the water quality light. The CC P/N 105166801 Deionizer system has a battery-powered, water quality light. Deionizer filters have a limited life cycle and are disposable. Life cycle of the filter will vary based on incoming water quality and water usage. If the deionizer system is equipped with a water quality light, press the button to check. Replace filter immediately if the red light comes ON indicating service is required.

  The following replacement filter is available from Club Car Service Parts:

  — Use filter P/N 104005901 for Deionizer Systems P/N's 105166801, 104006001, and AM10974.

  — Use filter P/N AM10975 for Deionizer System P/N AM10974.

***NOTE:*** *The filter P/N AM10975 will be sold to depletion. After this part becomes unavailable, use the filter P/N 104005901 for Deionizer System P/N AM10974.*

- Inspect the condition of all tubing, connections, and couplers. Make sure that all parts are in good working condition, secure, leak free, and properly connected. The coupler must have an O-ring and the dust cover properly attached.
- Clean optical indicator of the water quality light. If the optical indicator is dirty, clean it by wiping with a cloth.

**Decals**

Starting December 2013, new decals were installed on the deionizer wall bracket and the deionizer filter. The blue, deionizer wall bracket decal is a Filter Replacement Record Log. The yellow filter decal is a Fleet Inspection Record Log. Use these decals to record filter replacement activity and fleet inspection activity. For convenience, both decals have a QR code for ordering replacement filters.

**Seasonal Maintenance**

Water supplies must be drained and stored in an empty state if they will be exposed to freezing temperatures. Failure to do so can cause permanent damage.

Single point watering systems will require seasonal maintenance if vehicles are taken out of service or put into storage for a period of 6 weeks or longer. To prepare the SPWS, ensure the feed tube and coupler are on top of battery. Then, use the following steps to bring vehicle back into service:

1. After the batteries have been fully charged/equalized, connect the system to its water supply for 3 to 5 seconds, then disconnect regardless of whether or not the batteries are completely full.
2. Return the vehicle to normal operation.
3. Place the vehicle back into its regular watering schedule, waiting at least one week until next watering.

## BATTERY CARE – VEHICLES EQUIPPED WITH THE SINGLE-POINT WATERING SYSTEM (SPWS)

To keep batteries in good working condition, follow this maintenance program on a regular basis:

1. Keep the batteries clean and free of corrosion. Wash tops and terminals of batteries with a solution of baking soda and water; use 1 cup (237 mL) baking soda per 1 gallon (3.8 L) of water. Rinse solution off of the batteries. Do not allow this solution to enter the battery. Be sure terminals are tight. Let the terminals dry and then coat with Battery Terminal Protector Spray (CC P/N 1014305). **See following NOTE.**

***NOTE:*** *Dispose of waste water properly.*

2. The battery hold-downs should be tight enough so that the batteries do not move while the vehicle is in motion, but not so tight as to crack or buckle the battery case. For 8-volt batteries, tighten hold-down retaining nuts to 106 lb·in (12 N·m). The terminal connections should be clean and tight, and any worn insulation or frayed wires should be replaced. Tighten battery terminals to proper torque. **See Connecting the Batteries – Electric Vehicles on page 18. See following WARNING.**

### ⚠ WARNING

- **If battery wire terminals are damaged or corroded, replace or clean them as necessary. Failure to do so may cause them to overheat during operation and could result in fire, property damage, or personal injury.**

3. After use, charge the batteries. The batteries should never be left discharged any longer than absolutely necessary (do not leave discharged overnight).
4. Water the batteries monthly or according to the watering interval. **See Establishing the Watering Interval for New Vehicles on page 50. See Watering Batteries with the SPWS on page 52.**

### CAUTION

- **The watering interval must adequately maintain the electrolyte level above the top of the plates. See Figure 23.**

- **Water the batteries only AFTER charging.**

***NOTE:*** *Bottled distilled water, with the hand pump, CC PN 104006101, is recommended for private consumer SPWS applications.*

**Establishing the Watering Interval for New Vehicles**

If you do not already have a battery watering interval for your vehicles, manually check the battery water level weekly to establish the correct watering interval. Thereafter, water batteries according to the established interval with a minimum of once a month. During periods of heavy use, add additional watering as required.

**Single-Point Watering System (SPWS) Maintenance**

1. For vehicles newly equipped with the Single-Point Watering System, the initial electrolyte level check on all battery cells verifies that all the valves in the SPWS are functioning correctly. **See Periodic Service Schedules on page 41.** If a valve fails to open, the cell will eventually dry out. The initial one-time inspection of all cells will identify any occurrence of a valve that fails to open. If a valve fails to close, it will become evident due to the cell overflowing during routine watering. Either failure scenario is rare, but should be monitored in the initial inspection and during routine watering sessions. Replace malfunctioning valves to ensure maximum battery life. **See following CAUTION.**

## CAUTION

- **After checking the electrolyte, fully tighten the battery caps to prevent electrolyte leakage.**

2. After the initial six-week inspection, manually check the electrolyte level at least once per year, particularly after long-term storage or any other period of vehicle inactivity. **See preceding CAUTION.**

### BATTERY CARE – VEHICLES WITHOUT THE SINGLE-POINT WATERING SYSTEM (SPWS)

To keep batteries in good working condition, follow this maintenance program on a regular basis:

1. Keep the batteries clean and free of corrosion. Wash tops and terminals of batteries with a solution of baking soda and water; use 1 cup (237 mL) baking soda per 1 gallon (3.8 L) of water. Rinse solution off of the batteries. Do not allow this solution to enter the battery. Be sure terminals are tight. Let the terminals dry and then coat with Battery Terminal Protector Spray (CC P/N 1014305). **See following NOTE.**

***NOTE:*** *Dispose of waste water properly.*

2. **For Side-Post Battery:**Check the electrolyte level weekly **(Figure 23)**. Add water only **after** charging unless the electrolyte level is below the top of the plates. In this case, add just enough water to cover the plates, charge, and then check the level again. Never charge batteries if plates are exposed above electrolyte level. For best battery life, add only distilled water. **See following CAUTION and NOTE.**

## ⚠ CAUTION

- **Do not overfill the batteries.**

***NOTE:*** *A battery watering gun or bottle (CC P/N AM10818) is available from your authorized Club Car dealer.*

3. The battery hold-downs should be tight enough so that the batteries do not move while the vehicle is in motion, but not so tight as to crack or buckle the battery case. For 8-volt batteries, tighten hold-down retaining nuts to 106 in·lb (12 N·m). The terminal connections should be clean and tight, and any worn insulation or frayed wires should be replaced. Tighten battery terminals to proper torque. **See Connecting the Batteries – Electric Vehicles on page 18. See following WARNING.**

## ⚠ WARNING

- **If battery wire terminals are damaged or corroded, replace or clean them as necessary. Failure to do so may cause them to overheat during operation and could result in fire, property damage, or personal injury.**

4. After use, charge the batteries. The batteries should never be left discharged any longer than absolutely necessary (do not leave discharged overnight).

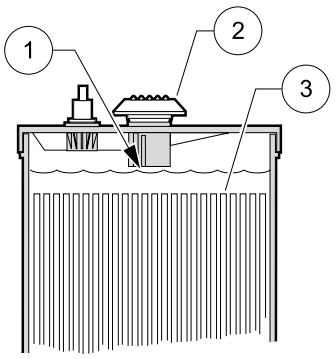


1. Level Indicator 2. Cap 3. Plates
Maintain electrolyte level from at least 1/2 inch (13 mm) above plates to 1/4 inch (6 mm) below level indicator.

17

**Figure 23 Battery Electrolyte Level**

# SINGLE POINT WATERING SYSTEM (SPWS)

## CAUTION

- **Water the batteries only AFTER charging.**
- **Use water that meets the quality standards shown on page 47. Maximize battery life by removing ions and heavy metals from water with the use of a single point watering system deionizer. A deionizer for vehicles with SPWS, Club Car Part Number 105166801 is available from Service Parts (DC powered water quality indicator light). Replacement cartridge: 104005901. Bottled distilled water, with hand pump, Club Car Part Number 104006101, is recommended for private consumer applications.**

## WATERING BATTERIES WITH THE SPWS

### Checking the Water Flow Rate

1. Connect the water hose with the built-in screen filter (2) to the water faucet (1) **(Figure 24)**. **See following CAUTION.**

## CAUTION

- **Make sure the screen filter is clean.**
- **Do not use a longer garden hose than provided with the System (20 feet), as a decrease in water pressure could overfill the batteries and damage the refill system.**

2. Before screwing the hose-end assembly (3) onto the opposite end of the water hose, check the screen filter (4) inside the end of the assembly to make sure it is clean **(Figure 24)**.
3. Connect the purger (5) to the female coupler (8) on the end of the hose-end assembly **(Figure 25)**.

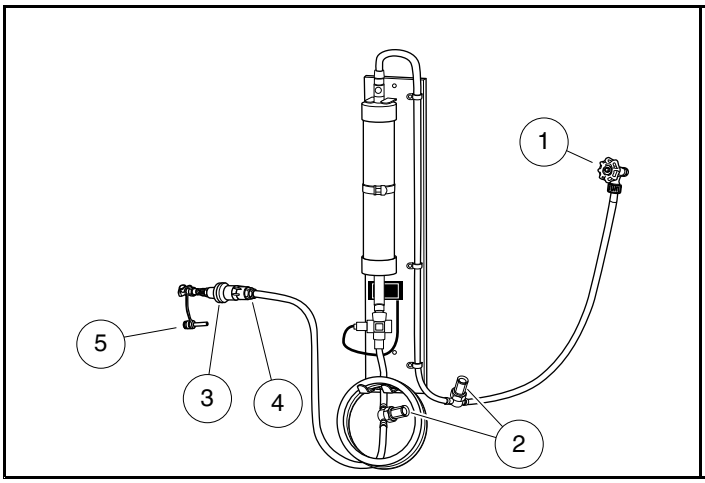


3083
**Figure 24 Connecting Hose with Filter to Water Source**

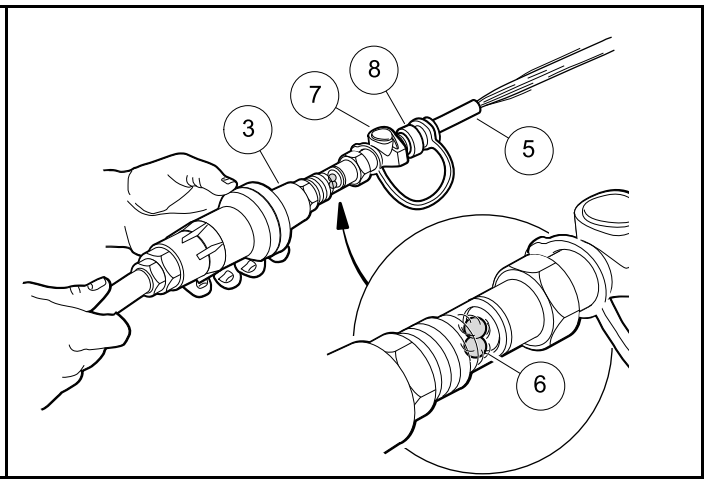


69
**Figure 25 Checking the Water Flow Rate**

4. Completely open the water faucet until the water flows out of the hose-end assembly (3), and note the movement of the red flow indicator balls (6). **See following NOTE.**

***NOTE:*** *This step also eliminates any trapped air from the water hose.*

*The water flow rate must be at least 2 gallons per minute (7.6 L per minute) and the water pressure must be no more than 100 psig (689.5 kPa) when static (no flow) for the SPWS to function properly.*

5. Check the water quality light on the deionizer to make sure the light is green in color, indicating acceptable water quality. If the light indicates unacceptable water quality, the cartridge must be replaced.
6. After ensuring adequate water flow rate and water quality, press the grey button (7) on the end of the female coupler (8) to disconnect the purger from the pressure regulator.

**Refilling the Batteries**

1. Locate the battery fill coupling (9) on the driver side of the battery compartment, remove the dust cover (10) from the male connector **(Figure 26)**, and connect the hose-end assembly (3) **(Figure 27)**. The water flow will begin immediately.

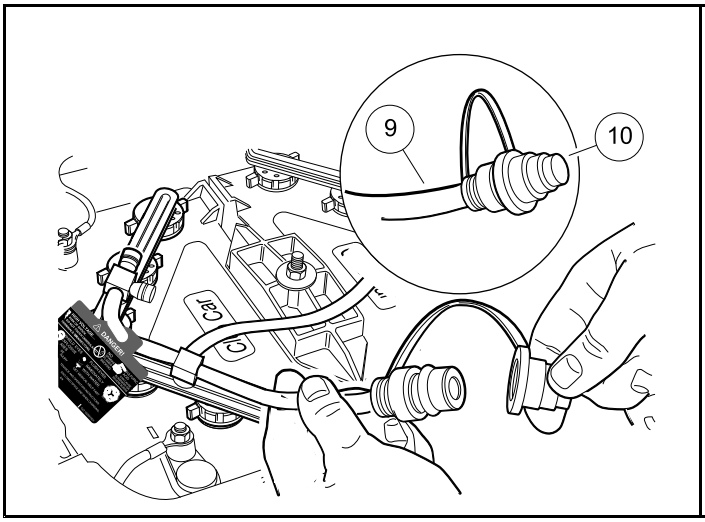


70
**Figure 26 Dust Cap**

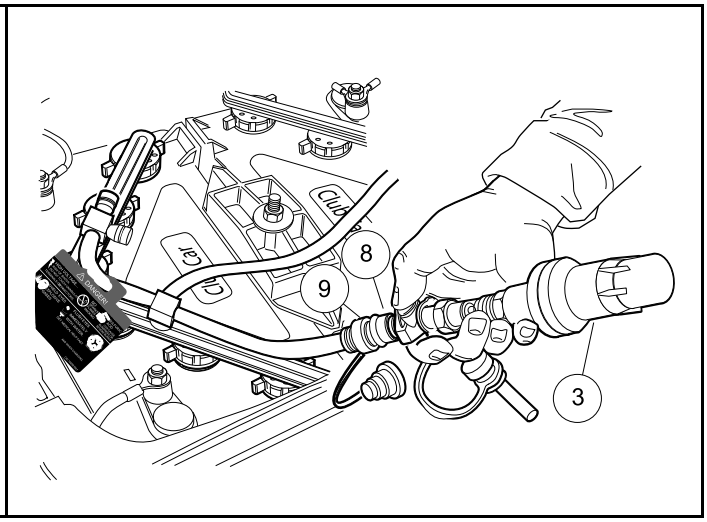


71
**Figure 27 Connecting Hose-end Assembly to Battery Fill Connector**

2. The red flow indicator balls should swirl, indicating that the batteries are being filled. **See following CAUTION.**

## CAUTION

- **If at any time water overflows from the batteries, immediately stop the refill process, disconnect the pressure regulator from the battery fill coupling, and call for service.**

3. When the red flow indicator balls stop moving, immediately press the grey button to disconnect the hose-end assembly from the battery fill coupling (9), and squeeze the dust cover (10) to lightly secure it to the male connector of the battery fill coupling **(Figure 26)**.
4. Place the battery fill coupling into the space between the battery bucket and the car body. Leaving the fill coupling on top of the battery bank or tucked between the batteries and the battery bucket can result in coupling damage.
5. Turn the water faucet off when finished filling the vehicle(s).

# BATTERY CHARGER

## ⚠ DANGER

- **The charging area must be ventilated. Hydrogen level in the air must never exceed 2%. The total volume of air in the charging area must be changed at least five times per hour. Exhaust fans should be located at the highest point of the roof. Contact a local HVAC engineer.**
- **Do not charge the vehicle batteries with the vehicle covered or enclosed. Any enclosure or cover should be removed or unzipped and pulled back when batteries are being charged. An accumulation of hydrogen gas could result in an explosion.**

## ⚠ WARNING

- **Only trained technicians should repair or service the charger. Contact your nearest authorized Club Car distributor/dealer.**
- **This appliance is not intended for use by persons (including children) with reduced physical, sensory or mental capabilities, or lack of experience and knowledge, unless they have been given supervision or instruction concerning use of the appliance by a person responsible for their safety. Children should be supervised to ensure that they do not play with the appliance.**
- **Do not operate the charger if it has received a sharp blow, was dropped, or otherwise damaged in any way.**
- **Have worn, cut, or damaged power cords or wires replaced immediately.**
- **Do not use near fuels, grain dust, solvents, thinners, or other flammables. Chargers can ignite flammable materials and vapors.**
- **Do not expose to rain or any liquid. Keep the charger dry.**
- **Do not connect a stationary charger to the receptacle if the charger cord, plug, or the vehicle receptacle is broken, damaged, or does not make a good electrical connection. Fire or personal injury can result. Have a qualified technician replace the parts.**
- **When the charger is on, the charger DC cord may be disconnected from the vehicle receptacle slowly. Jerking or pulling the DC cord out quickly could cause arcing and burning that could damage the plug and receptacle and could cause batteries to explode.**

**WARNING CONTINUED ON NEXT PAGE**

## ⚠ WARNING

- **Do not cover the charger cooling fins. Do not allow clothing, blankets, or other material to cover the charger. The fins dissipate heat and protect the charger from overheating.**
- **Cooling fins will become hot during charging. Do not touch. Use the handle.**

## CAUTION

- **The battery charger provided with this vehicle is approved for use only with the battery type originally shipped with the vehicle. Using a different battery type (different brand, different capacity, etc.) can cause under or overcharging and subsequent battery damage unless the charger is first reprogrammed with a new charging algorithm. Club Car only recommends OEM replacement batteries. Contact your authorized Club Car dealer/distributor with any questions about battery and charger compatibility or algorithm updates.**

## CHARGER SAFETY DECALS

Replacement charger safety decals are available. Contact your local authorized Club Car distributor/dealer.

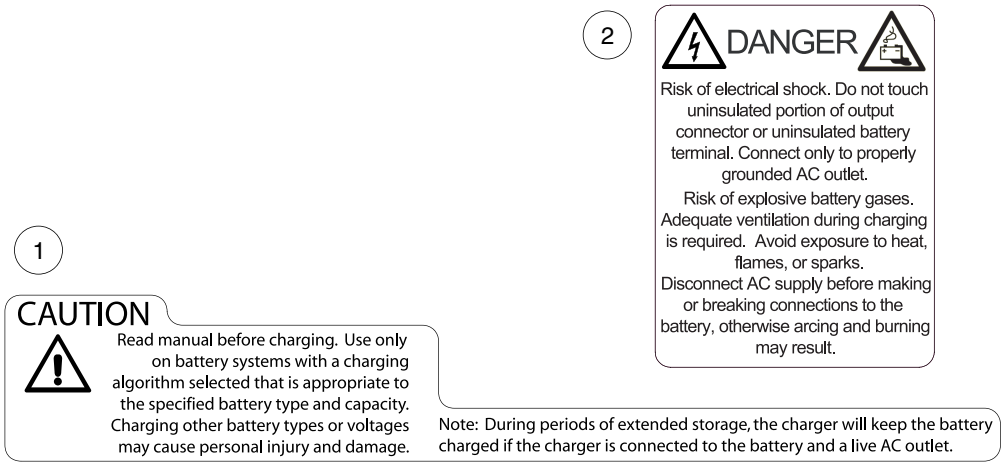


| | | | | | |
|---|---|---|---|---|---|
| 1 | Special Order Item*<br>Supplier P/N 460-0460 | Decal, Charger Caution | 2 | Special Order Item*<br>Supplier P/N 460-0461 | Decal, Charger Danger |
| * Decal orders require extra processing time. | | | | | |

2767

**Figure 28 Charger Safety Decals**

## USB SERVICE PORT

The ERIC charger has a USB port for use by Club Car authorized technicians for data transfer, reconfiguration, and updates. Keep the USB port cover in place when the port is not in use.

### USB Service Port Cleaning and Care

Depending on environmental conditions, such as coastal locations, open-air storage facilities, possible contamination in the USB port could result, preventing connectivity. If a poor connection is experienced, cleaning the USB port located in the front of the charger with an approved electrical contact cleaner will restore the connection.

Always reinstall the USB port dust cover after cleaning and use.

After cleaning, preventative maintenance of the USB port should include applying dielectric grease into the port cavity or applying Corrosion Block ® Corrosion Preventative to help prevent any reoccurance of contamination.

## UL AND CSA LISTING

The battery charger has been listed by UL and by the Canadian Underwriters and meets the criteria of the Canadian Standards Association.

## CHARGER AC CORD

### ⚠ WARNING

- **Install surge arrestors on incoming AC power lines. Surge arrestors will help protect electrical components in the charger and on the vehicle from all but direct or close lightning strikes.**

**WARNING CONTINUED ON NEXT PAGE**

## ⚠ WARNING

- **Two ERIC chargers can share a circuit, which should be a dedicated 15 or 20 ampere separately protected (circuit breaker or fuse) single-phase branch circuit that complies with all applicable electrical codes for the location.**
- **Connect the charger AC supply cord to a properly grounded, three-wire outlet within the voltage and frequency range shown on the charger.**
- **Do not use an adapter to plug the charger with a three-prong plug into a two-prong outlet. Improper connection of the equipment-grounding conductor can result in a fire or an electrical shock.**
- **Place all cords so they will not be stepped on, tripped over, or otherwise subjected to damage or stress.**

To reduce the risk of electric shock, the battery charger must be grounded. The charger is equipped with an AC electric cord having an equipment-grounding conductor and a grounding type plug. The AC plug must be connected to an appropriate receptacle that is properly installed and grounded in accordance with the National Electrical Code and all local codes and ordinances.

The use of an extension cord with the charger should be avoided. If one must be used, heed the following WARNING.

## ⚠ WARNING

- **An extension cord or electrical outlet must accept a three-prong plug. The extension cord should be a three-wire No. 12 AWG (American Wire Gauge) or no. 14 (British Standard Wire Gauge), and be as short as possible (no more than 12 feet (3.7 m). The use of an improper extension cord could result in fire or an electrical shock.**

### AC PLUG STRAIN RELIEF AND DRIP LOOP

To prevent stress on the AC plug connection at the charger, secure the cord to the charger with a zip tie (1) as shown. Make sure there is no tension on the plug by maintaining a large bend radius (2) in the cord. Make sure the cord loop dips below the level of the plug to prevent water from running down the cord and into the plug connection **(Figure 29)**.

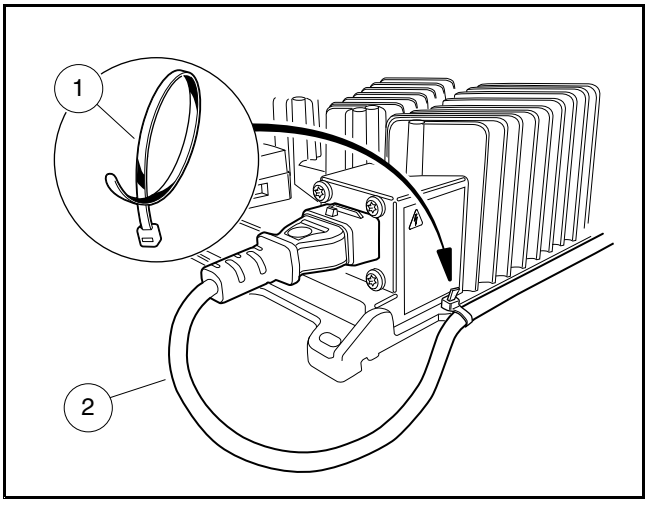


2782

**Figure 29 AC Cord Strain Relief and Drip Loop**

### PLUG AND RECEPTACLE

The charger cord, plug, and receptacle are wear items and should be inspected daily. Visually inspect them for cracks, loose connections, and frayed wiring; they must be replaced when worn or damaged. If charger plug or receptacle show signs of corrosion or the plug is difficult to insert or remove, check for worn or bent pins, then clean the receptacle contacts and plug terminals with a good electrical contact cleaner or light coating of WD-40® brand

spray lubricant. The plug should then be inserted and removed several times to ensure ease of insertion, ease of removal, and good electrical contact.

## ⚠ WARNING

- **If pins are bent, the plug must be replaced immediately. The plug is not serviceable. Do not attempt to repair the plug or straighten bent pins. Contact your local authorized Club Car dealer or distributor for repairs.**
- **Disconnect the AC cord prior to lubricating the plug and receptacle.**

***NOTE:*** *If the warning tag has been damaged or removed from the DC cord, have it replaced immediately.*

## CHARGER MOUNTING

Use the mounting holes to secure the charger **(Figure 30)**. Position the charger so that is has adequate ventilation and the charger status indicator panel is visible. The charger can be mounted in any orientation (right-side up, upside down, etc.) provided it has adequate ventilation **(Figure 31)**.

To help ensure optimal charge times, mount the charger in an area where ambient temperatures during charging remain below 104 °F (40 °C). **Thermal Cutback**

## ⚠ WARNING

- **Make sure the charger is securely mounted. Do not hang the charger by its handle.**
- **Place all cords so they will not be stepped on, tripped over, or otherwise subjected to damage or stress.**

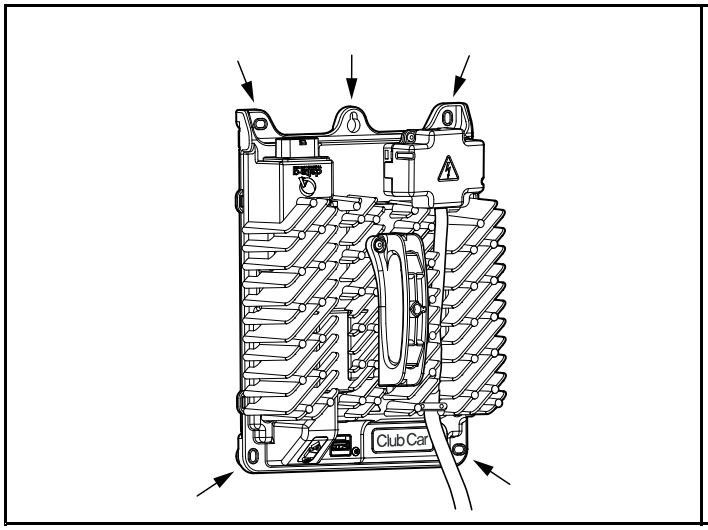


2674

**Figure 30 Charger Mounting Holes**

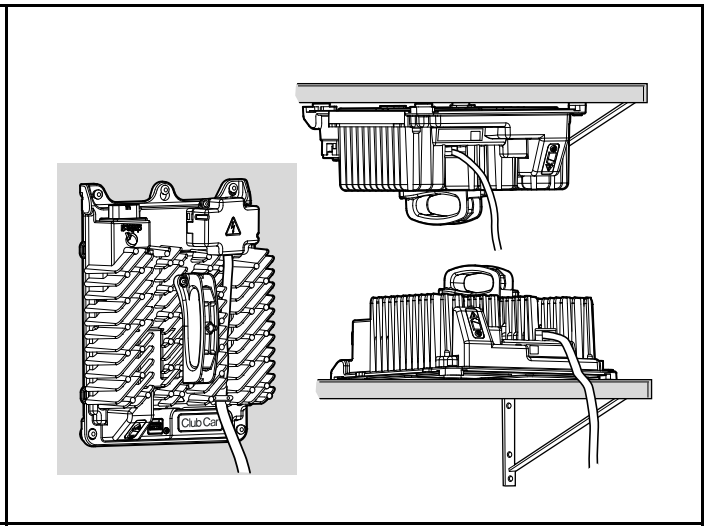


2675

**Figure 31 Examples of Charger Mounting Orientation**

## CHARGER POWER CONNECTION FUSE

The vehicle charger power circuit has an in-line 30-amp fuse located near the solenoid.

## CHARGER INTERLOCK

While the charger DC cord is plugged into the vehicle, the vehicle control circuit is locked out, preventing operation of the vehicle, as well as the possibility of consequent damage to the charger and the vehicle.

## AC INPUT VOLTAGE DETECTION

The ERIC charger automatically detects the AC input voltage and will operate at full power if the voltage is within the 100 to 240 VAC range. The charger also will function outside of that range down to 85 VAC and up to 270 VAC although charging times will be longer. Outside of the 85 to 270 VAC range, the charger will not operate.

## THERMAL CUTBACK

The ERIC charger operates at full power in ambient temperatures between -40 °F (-40 °C) and 104 °F (40 °C). The charger also will function outside of that range although charging times will be longer.

## CHARGE STATUS INDICATORS

The charge status indicator lights on the ERIC charger provide information concerning charge and charger status.

| LIGHT | STATUS | | STATUS EXPLANATION |
|---|---|---|---|
|  | Solid red | | Charger error. Reset charger power. **See Resetting ERIC Charger Power on page 61.** |
| | Flashing orange | | Charger unable to complete charge. |
| 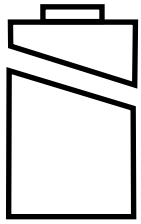 | 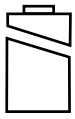 | Solid green<br>Solid green | Charging is complete. Battery pack is fully charged. |
| | 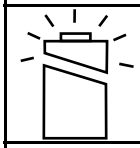 | Flashing green<br>Solid green | Charging is in progress. Battery pack has reached a high state of charge. |
| | 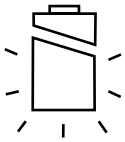 | Off<br>Flashing green | Charging is in progress. Battery pack has not reached a high state of charge. |
|  | Solid blue | | AC power to charger is present. |

## LONG-TERM STORAGE

Club Car chargers are designed to be left connected with AC power to the charger during off-season or long-term storage. **See Storage – Electric Vehicle on page 35.**

## CHARGING BATTERIES

**See Dangers and Warnings at Battery Charger beginning on page 54.**

### ⚠ WARNING

- **Be sure all wire connections at the receptacle are clean and tight.**
- **Do not rock or bend the plug. To connect the charger plug to the vehicle receptacle, grasp the plug handle and push the plug straight into the receptacle (Figure 32, Page 61).**
- **Do not pull on the DC cord (Figure 33, Page 61). Do not twist, rock or bend the plug. To disconnect the charger plug from the vehicle receptacle, grasp the plug by the handle and pull the plug straight out of the receptacle.**
- **Do not connect a charger to the receptacle if the charger cord, plug, or the vehicle receptacle is broken, damaged in any manner, or does not make a good electrical connection. Fire or personal injury can result. Have it replaced by a qualified service person immediately. Failure to follow these instructions could result in damage to the charger cord, the plug, and (or) the vehicle receptacle.**
- **Do not attempt to charge frozen batteries or batteries with bulged cases. Discard the battery in accordance with all environmental laws or return to an authorized Club Car dealer. Frozen batteries can explode.**
- **Do not use a charger if any of the following conditions exist:**
  - **The plug is too loose or does not make a good connection.**
  - **The plug and receptacle feel hotter than normal during charge.**
  - **The plug pins or receptacle contacts are bent or corroded.**
  - **The plug, receptacle, or cords are cut, worn, have any exposed wires or are damaged in any way.**
- **Using the charger with any of the above symptoms could result in a fire, property damage, personal injury, or death.**

### CAUTION

- **On all vehicles, turn off all accessories before charging batteries.**
- **The battery charger provided with this vehicle is approved for use only with the battery type originally shipped with the vehicle. Using a different battery type (different brand, different capacity, etc.) can cause under or overcharging and subsequent battery damage unless the charger is first reprogrammed with a new charging algorithm. Club Car recommends only OEM replacement batteries. Contact your authorized Club Car dealer/distributor with any questions about battery and charger compatibility or algorithm updates.**

***NOTE:*** *When temperatures fall below 65 °F (18.3 °C), batteries charged in unheated areas should be placed on charge as soon as possible after use. Batteries are warmest immediately after use, and cold batteries require more time to fully charge.*

*Batteries should be put on charge even if they have been used for only a short period (9 holes of golf or 10 minutes of operation).*

*Because the charger has a storage charge feature that automatically checks and recharges the batteries as necessary, the charger can remain plugged to the vehicle throughout the storage period.*

*Vehicles should be restricted to 40 to 50 amp hours of discharge or 36 holes of golf (or 40 minutes of private use) between charges until the batteries have been properly seasoned (50 to 70 charge cycles). For maximum battery life, Club Car recommends that electric vehicles always be recharged after 40 to 50 amp hours of discharge or each night in order to avoid deeply discharging the batteries. To detect amp-hour discharge, use the CDT diagnostic tool (CC P/N 105209501).*

**Battery Charging Procedure**

1. Stationary chargers: With the charger DC cord disconnected from the vehicle charger receptacle, connect the AC power supply cord to an AC outlet designed to provide the proper AC voltage for the charger.
2. Insert the charger DC plug into the vehicle receptacle. When inserting the DC plug, align the raised guide on the plug with the guide slot in the receptacle and push straight in slowly **(Figure 32, Page 61)**.
3. The charger will turn on two to five seconds later, after the lockout function activates. The control circuit lockout remains activated until the charger plug is disconnected from the vehicle.

***NOTE:*** *The dash-mounted charge indicator light will flash three times and the reverse buzzer simultaneously will sound three times to indicate charging has begun.*

4. As long as the charger is allowed to shut off by itself, the batteries will be fully charged. Overcharging and undercharging will normally be prevented.
5. If the charger does not seem to be operating properly, or if the batteries seem weak, contact your local Club Car distributor/dealer.

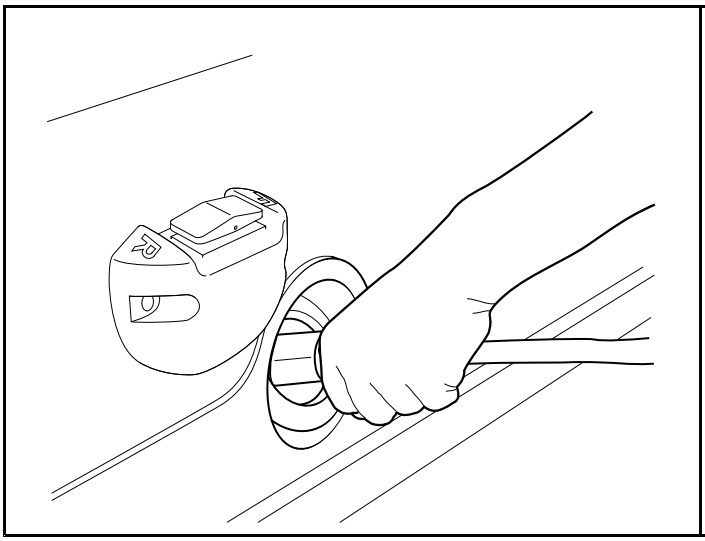

66

**Figure 32 Correct Insertion of Charger DC Plug**

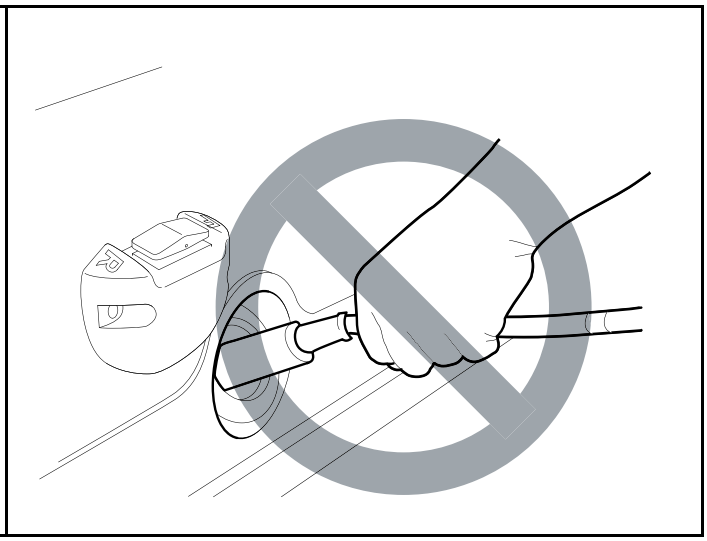

67

**Figure 33 Incorrect Removal of Charger DC Plug**

## RESETTING ERIC CHARGER POWER

The triangular status indicator light on the charger comes on in a solid red state to communicate a significant charger hardware or software failure. **See Charge Status Indicators on page 59.** Before replacing the charger, however, reset the charger in case the failure was caused by a temporary situation. To reset charger power, take the following steps:

1. Unplug the DC cord from the vehicle.
2. Unplug the AC power from the power source.
3. Wait for the red light to go off, wait 30 seconds, then plug in the AC cord.
4. When the blue AC indicator light comes on, plug in the DC cord.
5. If the triangular status indicator light comes on, contact your Club Car dealer. If the light does not come back on, attempt to charge the car as usual.

# BATTERY – GASOLINE VEHICLES

**See General Warnings on page 15.**

## ⚠ DANGER

- **Battery – Explosive gases! Do not smoke. Keep sparks and flames away from the vehicle and service area. Ventilate when charging or operating vehicle in an enclosed area. Wear a full face shield and rubber gloves when working on or near batteries.**
- **Tools, wires, and metal objects can cause sparks when shorted across a battery.**
- **Follow all instructions carefully when working with batteries.**
- **Charge battery in a well-ventilated area only.**
- **Battery – Poison! Contains acid! Causes severe burns. Avoid contact with skin, eyes, or clothing. Antidotes:**
  - **External: Flush with water. Call a physician immediately.**
  - **Internal: Drink large quantities of milk or water followed with milk of magnesia or vegetable oil. Call a physician immediately.**
  - **Eyes: Flush with water for 15 minutes. Call a physician immediately.**

## ⚠ WARNING

- **Do not jump start a dead battery using another battery and jumper cables.**

Gasoline vehicles are equipped with a 12-volt, side-post or top-post battery. The side-post battery requires infrequent watering. When changing a 12-volt battery in any gasoline-powered vehicle, the same size battery with adequate amperage ratings should be used as a replacement.

Any corrosion around the positive (+) or negative (–) terminals should be washed off with a solution of baking soda and water (1 cup (237 mL) per 1 gallon (3.8 L) of water). Rinse solution off the battery. Do not allow this solution to enter battery. Be sure terminals are tight. Let the terminals dry and then spray them with Battery Terminal Protector Spray (CC P/N 1014305). **See Side-Post Battery: Connecting the Battery-Gasoline Vehicles on page 17.**
**See Top-Post Battery: Connecting the Battery-Gasoline Vehicles on page 18.**
**See preceding and following WARNINGS.**

## ⚠ WARNING

- **If battery wire terminals are damaged or corroded, replace or clean them as necessary. Failure to do so may cause them to overheat during operation and could result in fire, property damage, or personal injury.**

Be sure battery clamp is properly tightened. For Side-Post Battery tighten to 80 in·lb (9 N·m). For Top-Post Battery tighten to 41 in·lb (4.3 N·m). A loose battery clamp may allow the battery to become damaged from vibration or jarring.

If battery appears weak, have it charged by a trained technician. The battery should never be left discharged any longer than absolutely necessary (do not leave discharged overnight).

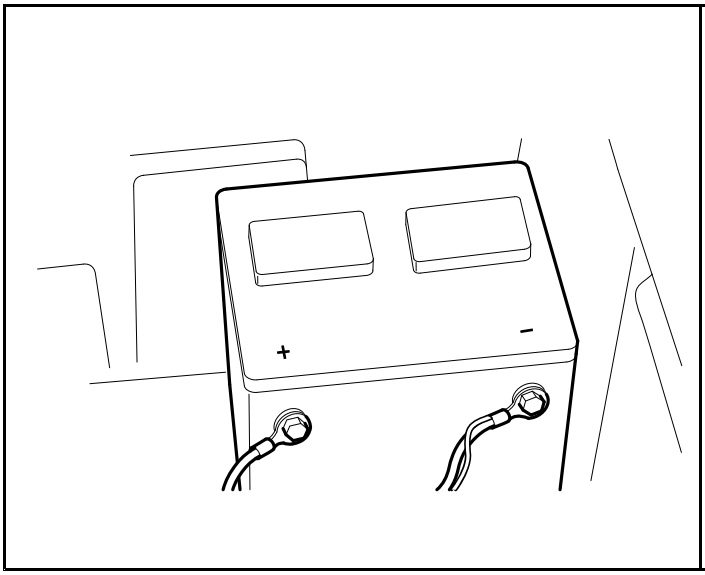


72

**Figure 34 Side-Post Gasoline Vehicle Battery**

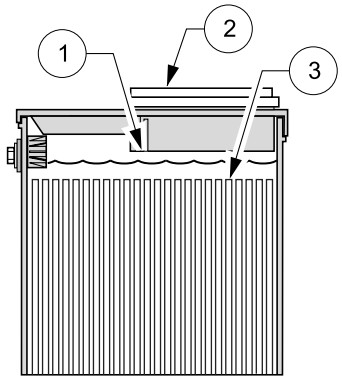


1. Level Indicator 2. Cap 3. Plates

Electrolyte level at least 1/2 inch (13 mm) above plates or to level indicator.

22

**Figure 35 Electrolyte Level for Side-Post Battery Only**

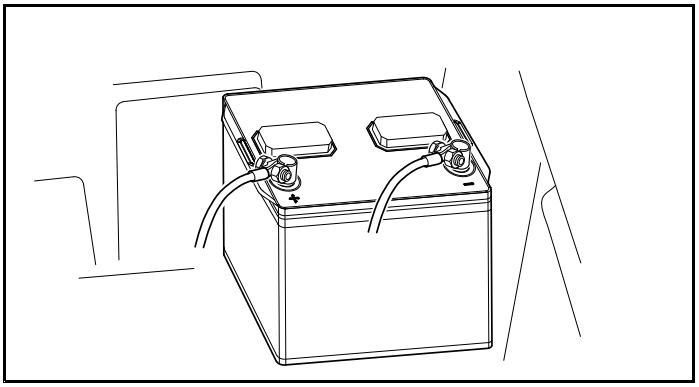


3166

**Figure 36 Top-Post Gasoline Vehicle Battery**

# ENGINE OIL – GASOLINE VEHICLE

Even though the low oil warning light on the dash should illuminate if oil level becomes low, engine oil level should be checked monthly. Vehicle should be on a level surface when checking oil. Do not overfill with oil.

## ENGINE OIL LEVEL CHECK

1. Remove the oil level dipstick from the oil filler tube, and wipe oil off dipstick **(Figure 37)**. **See following CAUTION.**

## CAUTION

- **Do not remove dipstick while engine is running.**

2. Check oil by fully inserting the dipstick into the oil filler tube and immediately removing it.
3. If the oil level is at or below the low level mark on the dipstick gauge, add oil until the level is between low and full levels (safe level).

4. Insert the dipstick into the oil filler tube. **See following NOTE.**

***NOTE:*** *Properly recycle or dispose of used oil in accordance with local, state, and federal regulations.*

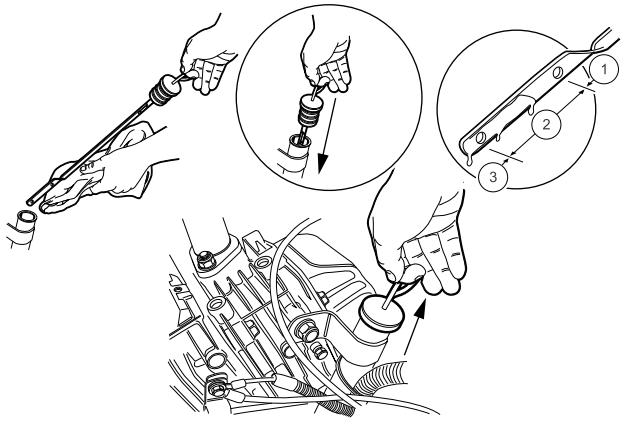


1. Full level 2. Safe level 3. Low level

2662

**Figure 37 Engine Oil Level Check**

## ENGINE OIL CHANGE

Engine oil should be changed after the first 100 hours of operation. After that, it should be changed every 200 hours of operation or annually, whichever comes first.

1. Turn the key switch to the OFF position, then remove the key. Place the Forward/Reverse handle in the NEUTRAL position. Chock the front wheels.
2. Access the engine compartment.
3. Disconnect battery and spark plug wire. **See Side-Post Battery: Disconnecting the Battery-Gasoline Vehicles on page 17.**
   **See Top-Post Battery: Disconnecting the Battery-Gasoline Vehicles on page 17.**
4. Position a pan designed for oil changes under the drain plug (1) **(Figure 38)**.

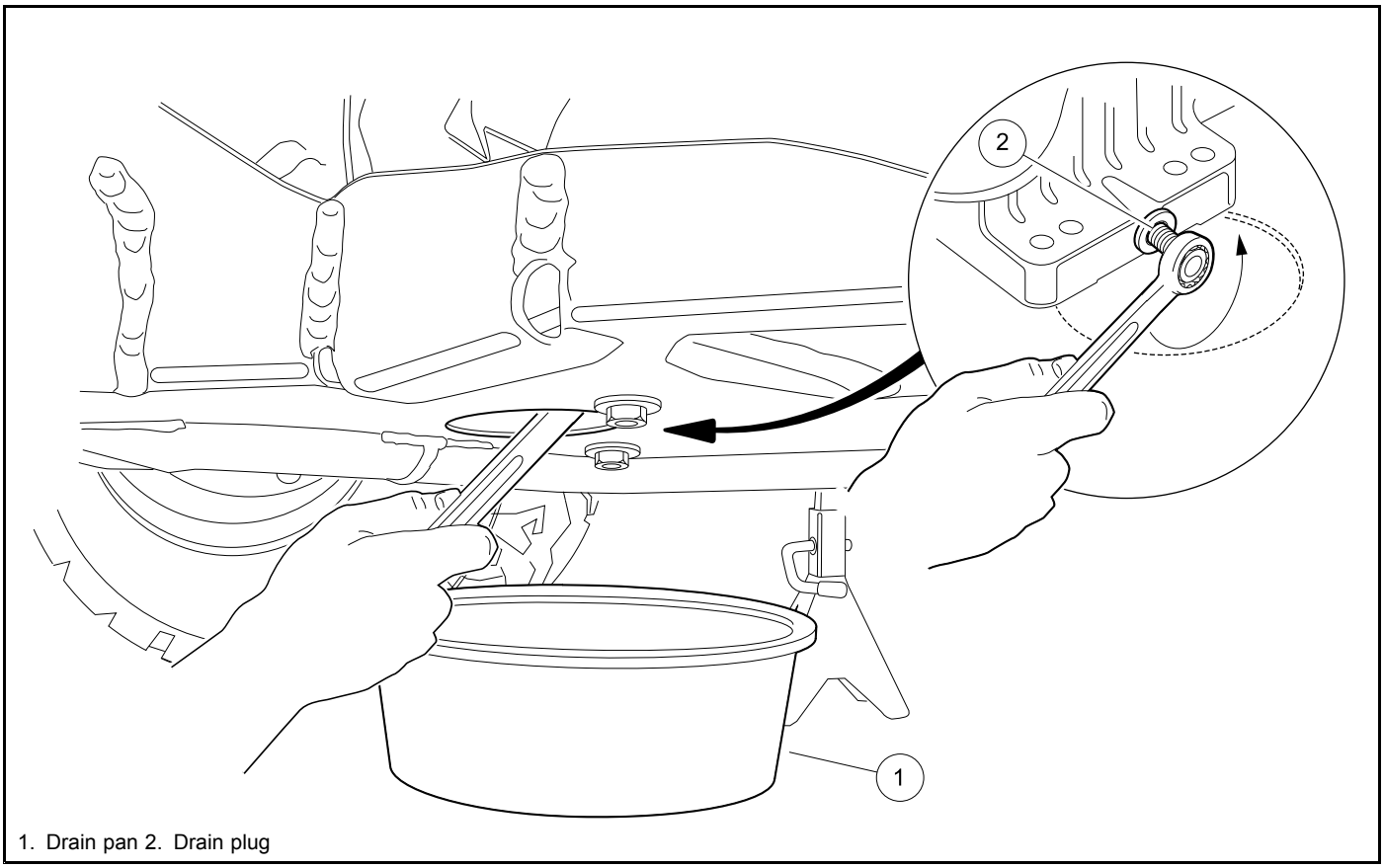


1. Drain pan 2. Drain plug

2667

**Figure 38 Engine Oil Drain Plug and Pan**

5. Use a 14 mm socket or wrench to remove the drain plug, turning it counterclockwise, and allow the engine oil to drain into the pan. **See following WARNING.**

## ⚠ WARNING

- **Do not attempt to change engine oil when the engine is hot or even warm. Engine oil can cause skin burns.**
- **Wear safety glasses or approved eye protection when servicing the vehicle. Wear rubber gloves when handling oil drain plug and oil drain pan.**

6. Clean the oil drain plug threads with solvent to remove oil and oil residue. Make sure that the compression washer remains on the drain plug.
7. Use a 14 mm socket or wrench and replace the oil drain plug, turning it clockwise, and tighten to 18 ft·lb (24.4 N·m).
8. Remove the dipstick and add engine oil into the dipstick port. Use a funnel or pour spout to direct the oil into the dipstick port. The engine requires 40.0 fl-oz (1.2 L) of oil per change. 10W-30 or 5W-30 grade SE or higher is recommended. Refer to oil viscosity guidelines for selection of oil grade **(Figure 39)**. Replace the dipstick.

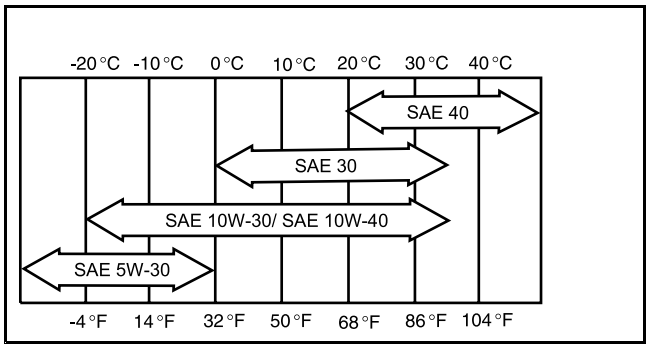


213

**Figure 39 Oil Viscosity Chart**

9. Connect battery and spark plug wire. **See Side-Post Battery: Connecting the Battery-Gasoline Vehicles on page 17.**
   **See Top-Post Battery: Connecting the Battery-Gasoline Vehicles on page 18.**
10. With the Forward/Reverse handle in the NEUTRAL position and the Maintenance/Service switch in the SERVICE position, start and run the engine for a few minutes. Observe the drain plug from under the vehicle and watch for oil leaks. If leaks appear, begin with step 1 and repeat the appropriate steps as needed to correct the problem.
11. Remove the dip stick and check the engine oil as a final step. Replace the dip stick.

## FUELING INSTRUCTIONS – GASOLINE VEHICLES

**See General Warnings on page 15.**

### ⚠ DANGER

- **Turn the key switch to the OFF position before fueling.**
- **Do not pour fuel into the fuel tank when the engine is hot or while it is running.**
- **To avoid electric arc caused by static electricity, the fuel storage/pumping device must be grounded. If the pump is not grounded, the vehicle must be grounded to the pump before and during the fueling operation.**
- **If the vehicle has an all-weather enclosure installed, be sure the fuel tank is properly vented as shown .**
- **To avoid the possibility of fire, clean up any spilled fuel before operating the vehicle.**

### ⚠ CAUTION

- **Use unleaded gasoline only.**
- **Whenever possible, avoid using oxygenated and blended fuels.**
- **Do not use any fuel with an alcohol content that exceeds 10% by volume (such as E15 and E85). Ethanol is an alcohol that readily absorbs moisture, causing corrosion of fuel system components. It also damages neoprene and other plastic and rubber components. Use of these fuels in this vehicle will void the warranty.**

**CAUTION CONTINUED ON NEXT PAGE**

### ⚠ CAUTION

- **Do not repeatedly attempt to start a vehicle when the fuel pump is dry (no gas in tank). Doing so can damage the fuel pump.**

***NOTE:*** *Whenever possible, avoid using oxygenated fuels and fuels that are blended with alcohol.*

*Vehicles to be stored for extended periods should be prepared for storage as instructed.* ***See Preparing the Gasoline Vehicle for Extended Storage on page 38.***

1. Turn the key switch to the OFF position before fueling.
2. Lift and remove seat bottom.
3. The fuel tank is located on driver side of vehicle. Remove fuel cap and fill the fuel tank with fresh unleaded gasoline only.**See preceding CAUTION and NOTE.**
4. Replace fuel cap on tank. Ensure that cap is tightened securely (tighten until it clicks).
5. Replace seat bottom.

## CLEANING THE VEHICLE

Club Car Precedent vehicles are equipped with hand-washable front and rear bodies. Use only commercially available automotive cleaners with a sponge or soft cloth for normal cleaning. A garden hose at normal residential water pressure is adequate.

The manufacturer does not recommend any type of pressure washing or steam cleaning. Such a process will expose electrical components to moisture. Moisture entering electrical components can result in water damage and subsequent component failure.

Use non-abrasive wax products. Battery acid, fertilizers, tars, asphalt, creosote, paint, or chewing gum should be removed immediately to prevent possible stains. **See following CAUTION.**

### CAUTION

- **Use of leveling or rubbing compounds will permanently dull finish of vehicle.**
- **Do not apply wax products to the black plastic material of the front and rear underbody, the front bumper, or the textured area of the rear beauty panel marked “NO STEP.” Wax will cause these surfaces to become discolored.**

The seats of the vehicle will last longer with proper cleaning. Use a solution of 10% liquid soap and warm water applied with a soft cloth. For imbedded dirt, a soft bristle brush may be used. For heavy soiling, difficult stains or scratches, blemishes, or other body damage, see the appropriate maintenance and service manual.

***NOTE:*** *Dispose of waste water properly.*

## ACCESSORIES

A complete line of parts and accessories is available from Club Car channel partners. To find your local authorized Club Car dealer, visit www.clubcardealer.com, call 1-800-ClubCar (258-2227), or scan this QR Code **(Figure 40)** to be taken to the Club Car dealer locator. Download a QR Code reader such as RedLaser or Barcode Scanner to your cell phone or tablet.



3118

**Figure 40 Dealer Locator QR Code**

Care should be taken that these accessories are properly installed by trained technicians, and that they are used in the manner for which they were designed. **See following WARNING.**

### ⚠ WARNING

- **Windshields and weather-proof enclosures will not protect occupants from flying objects (golf balls, etc.).**

## SUBSEQUENT OWNER REGISTRATION

In the event a vehicle is bought as a used vehicle, we strongly urge the new owner to register the vehicle with Club Car. This will enable us to contact you if the need arises. Please send your name, address, and serial number(s) of the vehicle(s) to Club Car, LLC, P.O. Box 204658, Augusta, Georgia 30917-4658, Attention: Vehicle Registration.

## PRECEDENT FOUR-PASSENGER VEHICLE

The Precedent four-passenger vehicle is designed to provide a smooth and comfortable ride for four passengers, and is offered in both gasoline and electric power configurations. This owner's manual should be read thoroughly prior to operating the vehicle.

The Precedent four-passenger vehicle should be driven and maintained as stated in this owner's manual with the following additions:

### ⚠ WARNING

- **Vehicle should be driven at slower speeds when four persons are in the vehicle.**
- **Passengers should hold on to hand holds or hand rails at all times. See page 12. Driver should keep both hands on the steering wheel while vehicle is moving.**
- **Do not leave children unattended on the rear seat while vehicle is moving.**
- **No more than four persons should be on the vehicle at one time.**

### MAINTENANCE

Refer to pages 41 through 45 for Periodic Service and Lubrication Schedules. **See following NOTE.**

***NOTE:*** *If the vehicle is constantly hauling heavy loads, the preventive maintenance procedures should be performed more often than recommended in the service and lubrication schedules.*

## ACCESSORY ONBOARD CHARGER

An onboard charger, which is installed under the rear seat, is available for the Precedent four-passenger electric vehicle. The charger should be plugged into a properly grounded outlet. The AC line to which the charger is to be connected must be of the proper AC input voltage for the charger and must be capable of supplying sufficient current. See the battery charger owner's manual supplied with the battery charger for specific operating instructions and specifications before using the charger. **See following WARNING and CAUTION.**

### ⚠ WARNING

- **Each charger should have its own dedicated 15 or 20 ampere separately protected (circuit breaker or fuse) single phase branch circuit, in accordance with all applicable electrical codes for the location.**

### ⚠ CAUTION

- **Before charging batteries, turn off all accessories on all vehicles.**
- **If using an onboard charger, be sure the AC plug is unplugged from the outlet before attempting to drive the vehicle.**
- **Be sure the AC cord is properly wound up on the reel before driving the vehicle.**
- **Study all general information and WARNING, CAUTION, and NOTE statements in the Battery Charger section on page 54.**

# VEHICLE SPECIFICATIONS

| SPECIFICATIONS | TWO-PASSENGER ELECTRIC VEHICLE | TWO-PASSENGER GASOLINE VEHICLE | FOUR-PASSENGER ELECTRIC VEHICLE | FOUR-PASSENGER GASOLINE VEHICLE |
|---|---|---|---|---|
| **POWER SOURCE** | | | | |
| **Drive motor:** Direct drive, 48 volts DC, shunt-wound, 3.1 hp | • | | • | |
| **Transaxle:** Double reduction helical gear with 12.3:1 direct drive axle | • | | • | |
| **Electrical system:** 48-volts DC, reduced speed reverse | • | | • | |
| **Batteries:** High capacity, deep cycle | • | | • | |
| **Charger:** E.R.I.C. Automatic, 48-volt; UL and CSA listed<br>**See E.R.I.C. Battery Charger Specifications on page 72.** | • | | • | |
| **Battery:**12-volt Side-Post or Top-Post Battery | | • | | • |
| **Engine:** 4 cycle, OHC, 404 cc, 14 Horsepower (10.4 kW) rated engine @ 3600 RPM (per SAE J 1940), single cylinder, air cooled, with splash lubrication system | | • | | • |
| **Fuel system:** Electronic fuel injection (EFI), high-pressure rotary fuel pump with 10 micron fuel filter | | • | | • |
| **Governor:** Automatic ground speed sensing, internally geared in transaxle | | • | | • |
| **Ignition:** Digital CDI with electronic RPM limiter | | • | | • |
| **Transaxle:** Precision helical gears, forward/reverse with neutral position (11.47:1 forward; 15.63:1 reverse), with optional limited slip differential | | • | | • |
| **Torque converter:** Automatic, variable-speed, dry type | | • | | • |
| **Electrical system:** 12-volt, 500 cca at 0 °F (-17.8 °C), 650 cca at 32 °F (0 °C). 105-minute reserve capacity | | • | | • |
| **Torque converter:** Automatic, variable speed, dry type | | • | | • |
| **STEERING/SUSPENSION/BRAKES** | | | | |
| **Steering:** Self-adjusting rack and pinion | • | • | • | • |

**TABLE CONTINUED ON NEXT PAGE**

| SPECIFICATIONS | TWO-PASSENGER ELECTRIC VEHICLE | TWO-PASSENGER GASOLINE VEHICLE | FOUR-PASSENGER ELECTRIC VEHICLE | FOUR-PASSENGER GASOLINE VEHICLE |
|---|---|---|---|---|
| **Suspension:** Front and rear tapered mono-leaf springs with dual hydraulic shocks | • | • | • | • |
| **Brakes:** Dual rear wheel self-adjusting brakes with cast iron drums and single brake pedal with automatic-release park brake | • | • | • | • |
| **BODY/CHASSIS** | | | | |
| **Frame/Chassis:** Aluminum and composite | • | • | • | • |
| **Front and rear body:** Dupont Surlyn© Reflections | • | • | • | • |
| **Body finish:** High-gloss molded-in color | • | • | • | • |
| **Tires:** 18 x 8.5 – 8 tubeless, 4 ply rated | • | • | • | • |
| **Lug- Nut Torque Values:** Front and Rear tires | 55 ft·lb (±5.0) (67.8 to 81.3 N·m) | | | |
| **DIMENSIONS/WEIGHT** | | | | |
| **Overall length** | 91.5 in. (232 cm) | 91.5 in. (232 cm) | 104 in. (264 cm) | 104 in. (264 cm) |
| **Overall width** | 47.25 in. (120 cm) | 47.25 in. (120 cm) | 47.25 in. (120 cm) | 47.25 in. (120 cm) |
| **Overall height** (with canopy) | 68.5 in. (174 cm) | 68.5 in. (174 cm) | 71 in. (180 cm) | 71 in. (180 cm) |
| **Overall height** (at steering wheel) | 48.0 in. (122 cm) | 48.0 in. (122 cm) | 48.0 in. (122 cm) | 48.0 in. (122 cm) |
| **Wheelbase** | 65.5 in. (166 cm) | 65.5 in. (166 cm) | 65.5 in. (166 cm) | 65.5 in. (166 cm) |
| **Ground clearance** | 4.5 in. (11 cm) | 4.5 in. (11 cm) | 4.5 in. (11 cm) | 4.5 in. (11 cm) |
| **Front wheel tread** | 34.5 in. (88 cm) | 34.5 (88 cm) | 34.5 in. (88 cm) | 34.5 (88 cm) |
| **Rear wheel tread** | 38.6 in. (98 cm) | 38.6 in. (98 cm) | 38.6 in. (98 cm) | 38.6 in. (98 cm) |
| **Weight** (standard electric vehicle with canopy, with batteries) | 909 lb (412.5 kg) | | 1024 lb (464.5 kg) | |
| **Weight** (standard gasoline vehicle with canopy, with battery, without fuel) | | 651 lb (295 kg) | | 768 lb (348 kg) |
| **Forward speed** | 12 to 15 mph (19 to 24 km/h) | | | |
| **Curb clearance circle** (diameter) | 17 ft - 4 in. (528 cm) | 17 ft - 4 in. (528 cm) | 17 ft - 4 in. (528 cm) | 17 ft - 4 in. (528 cm) |
| **Standard seating capacity** | 2 | 2 | 4 | 4 |
| **LIQUID CAPACITIES** | | | | |
| **Transaxle** | 22 fl-oz (0.67 L) | | 22 fl-oz (0.67 L) | |
| **Engine crankcase** | | 40 fl-oz (1.2 L) | | 40 fl-oz (1.2 L) |
| **Transaxle** | | 22 fl-oz (0.67 L) | | 22 fl-oz (0.67 L) |
| **Fuel tank** | | 5.9 gal (22.3 L) | | 5.9 gal (22.3 L) |

**TABLE CONTINUED ON NEXT PAGE**

| SPECIFICATIONS | TWO-PASSENGER ELECTRIC VEHICLE | TWO-PASSENGER GASOLINE VEHICLE | FOUR-PASSENGER ELECTRIC VEHICLE | FOUR-PASSENGER GASOLINE VEHICLE |
|---|---|---|---|---|
| **TIRE PRESSURE** | | | | |
| **Front and rear** | 18 to 20 psig (124 to 138 kPa) | 18 to 20 psig (124 to 138 kPa) | 18 to 20 psig (124 to 138 kPa) | 18 to 20 psig (124 to 138 kPa) |
| **NOISE AND VIBRATION** | | | | |
| **Drive-by noise level to operator** Test method: EN 12053:2001 | 68.5 dBA Uncertainty: 2 dBA | 75.5 dBA Uncertainty: 2 dBA | 68.5 dBA Uncertainty: 2 dBA | 75.5 dBA Uncertainty: 2 dBA |
| **Vibration at driver's seat** Test method: EN 13059:2002 | 0.6 $(m/s^2)^2$ Uncertainty: 0.114 $(m/s^2)^2$ | 0.7 $(m/s^2)^2$ Uncertainty: 0.21 $(m/s^2)^2$ | 0.8 $(m/s^2)^2$ Uncertainty: 0.072 $(m/s^2)^2$ | 0.7 $(m/s^2)^2$ Uncertainty: 0.21 $(m/s^2)^2$ |

# E.R.I.C. BATTERY CHARGER SPECIFICATIONS

| E.R.I.C. BATTERY CHARGER SPECIFICATIONS | |
|---|---|
| **MODEL NUMBER** | IC650-048-CC |
| **AC INPUT** | |
| **AC voltage** | 100 to 240 VAC |
| **Frequency** | 50 / 60 Hz |
| **POWER CONSUMPTION** | |
| **Maximum AC input current (amps)** | 7.5 |
| **DC OUTPUT** | |
| **Rated DC voltage (VDC)** | 48 |
| **Maximum DC voltage (VDC)** | 72 |
| **Maximum DC output current (amps)** | 13.5 |
| **DIMENSIONS/WEIGHT** | |
| **Case – overall length** | 9.9 in (25.2 cm) |
| **Case – overall width** | 7.3 in (18.6 cm) |
| **Case – overall height** | 3.1 in (8 cm) |
| **AC cord length** (standard length) | 6 ft (183 cm) |
| **DC cord length** (standard length) | 9 ft (274 cm) |
| **Weight** | 6.5 lb (3 kg) |
| **MOUNTING CONFIGURATION** | |
| **Mounting:** Set on shelf; mount under shelf, on wall or ceiling; or hang securely from ceiling: any orientation. | • |

# WARRANTIES

## CLUB CAR® LIMITED WARRANTY FOR PRECEDENT VEHICLES

### WARRANTY

CLUB CAR, LLC (“CLUB CAR”) hereby warrants to the Original Purchaser or Lessee, as those terms are defined herein, and subject to the provisions, limitations and exclusions in this limited warranty, that its new vehicle or new component purchased from CLUB CAR or an Authorized Dealer or Distributor shall be free from defects in material and workmanship under normal use and service for the periods stated below, subject to the provisions, limitations and exclusions in this limited warranty.

This limited warranty covers material, workmanship and repair labor cost as to those items specifically listed below for the periods specified. Such repair labor shall be performed only by CLUB CAR, its Authorized Dealers or Distributors, or a service agency approved by CLUB CAR. For repairs made by qualified technicians other than CLUB CAR’s factory technicians or an Authorized Dealer or Distributor, CLUB CAR will provide only the replacement parts or components.

IF THE WARRANTY REGISTRATION FORM IS NOT COMPLETED AND RETURNED TO CLUB CAR AT THE TIME OF THE ORIGINAL RETAIL SALE, PURCHASER MUST PROVIDE PROOF OF DATE OF PURCHASE WITH ANY WARRANTY CLAIM.

| | i2L | i2 | V4 |
|---|---|---|---|
| **VEHICLE MAIN FRAME** | LIMITED LIFETIME | | |
| **GASOLINE POWERTRAIN:** Engine, transaxle, torque converter (drive and driven) | 5 | 5 | 5 |
| **SUSPENSION:** Steering gearbox, steering column, shocks, and leaf springs. | 4 | 4 | 4 |
| **MAJOR ELECTRONICS:** Solid state speed controller and battery charger. | 4 | 4 | 4 |
| **DEEP CYCLE BATTERY:** 25,000 amp hours as recorded by the controller, or four years, whichever occurs first, for vehicles properly maintained using an authorized deionizer system. Otherwise, 20,000 amp hours or four years, whichever occurs first. | 4 | 4 | 4 |
| **PEDAL GROUP:** Pedal group mechanical assembly, brake cluster assemblies, and brake cables. | 4 | 4 | 4 |
| **SEATS:** Seat bottom, seat back, and armrests. | 4 | 4 | 4 |
| **CANOPY SYSTEM:** Canopy, rear canopy supports, drainage system and structural accessory module (SAM). | 4 | 4 | 4 |
| **ELECTRIC POWERTRAIN:**Electric motor, transaxle and MCOR. | 3 | 3 | 3 |
| **GASOLINE SYSTEMS:** Air intake system, exhaust system, and starter generator | 3 | 3 | 3 |
| **BODY GROUP:** Beauty panels and front and rear underbody. | 3 | 3 | 3 |
| **ALL REMAINING COMPONENTS:** Solenoid, GCOR, limit switches, voltage regulator, F&R switch, and options and accessories supplied by CLUB CAR, including components not specified otherwise. | 2 | 2 | 2 |

### EXCLUSIONS

Excluded from any CLUB CAR warranty is damage to a vehicle or component resulting from a cause other than a defect including poor maintenance, neglect, abuse, accident and collision, maintenance adjustments, unreasonable or unintended strain or use, improper installation of accessories (such as connecting any accessories to less than the full pack of batteries), installation of parts or accessories that are not original equipment including non-approved GPS systems, non-approved alteration and acts of God. Also excluded from any CLUB CAR warranty are all fuses, filters, decals (except safety decals), lubricants, routine wear items such as the charger plug and receptacle, engine mounts, mats, pads, spark plugs, light bulbs, brake shoes, belts, brushes, bushings, drive buttons, cosmetic deterioration, and items that deteriorate, fade or fail due to exposure or ordinary wear and tear.

The provisions of this limited warranty shall not apply to failure due to the following conditions:

1. Batteries
   1.1. Improper charging of a vehicle due to the use of a battery charger model not approved by Club Car for use with the vehicle.
   1.2. Use of water in batteries, including tap water, that contains impurities. Distilled water or a properly maintained, Club Car approved battery water deionizer and filter system should be used to ensure water quality.
   1.3. Abuse such as overcharging, undercharging, improper fluid levels, loose wiring and fasteners, or rusted or corroded hardware.
   1.4. Use of energy management systems that do not allow a minimum of 12 hours of charge time to assure proper charging.
   1.5. Use of any accessories that do not draw power off the complete 48V pack.
   1.6. Neglect, breakage, freezing, fire, explosion, wreckage, melted terminal posts, the addtion of any chemical, or the operation of the battery in an uncharged condition (below half charge 1.200 specific gravity); the installation of the batteries in reverse or recharging in reverse, breakage of containers, covers, or terminal post, or batteries used in applications for which they were not designed.
   1.7. A battery damaged by a defective charger or batteries in vehicles that do not receive proper charging.
   1.8. A vehicle not having an operational charger on a circuit that has the parameters specified in the vehicle owner's manual (the number of operational chargers must equal the number of operational vehicles), or use of an unapproved algorithm.
2. Lack of proper maintenance such as preventive maintenance checks, proper rotation of vehicles in a fleet application, maintaining proper tire pressure and alignment and tightening loose wire connections as outlined in the owner’s manual.
3. Damages caused by improper installation of the component.
4. Failed semiconductor parts such diodes and fuses that are vulnerable to electrical overloads (including lightning) beyond the control of CLUB CAR.
5. Damaged charger AC and DC cord set with plug, which is a wear item and subject to user abuse.
6. Use of gasoline containing more than 10% ethanol.

Without limiting the generality of the foregoing in any way, and as part of its limited warranty exclusion, CLUB CAR does not warrant that its vehicle or components such as batteries, computer, controller or electrical device are suitable for use in any application other than in its products. As in the use of any vehicle, batteries, computer, controller or electrical device, a prudent owner will read and study the owner’s manual, the operator instructions and the warning labels; and will exercise due care in working on or around vehicles, batteries or electrical devices.

Transportation expenses for warranty services are also excluded from this warranty.

**VOIDING OF WARRANTY**

THIS AND ANY OTHER WARRANTY SHALL BE VOID IF THE VEHICLE OR COMPONENT IS ABUSED OR USED IN AN UNINTENDED MANNER OR SHOWS INDICATIONS THAT IT HAS BEEN ALTERED IN ANY WAY, INCLUDING, BUT NOT LIMITED TO, MODIFICATION OF THE SPEED GOVERNOR, BRAKING SYSTEM, STEERING, TRANSAXLE, OR OTHER OPERATING SYSTEMS OF THE CAR TO CAUSE IT TO PERFORM OUTSIDE CLUB CAR SPECIFICATIONS. THE WARRANTY IS LIKEWISE VOID IF THE VEHICLE SHOWS INDICATIONS THAT REASONABLE OR NECESSARY MAINTENANCE AS OUTLINED IN THE OWNER’S MANUAL AND MAINTENANCE AND SERVICE MANUAL WAS NOT PERFORMED AT THE TIME AND IN THE MANNER SPECIFIED IN SUCH MANUALS.

**SOLE REMEDY**

CLUB CAR’s liability under this limited warranty or in any action whether based upon warranty, contract, negligence, strict product liability or otherwise, shall be the repair or replacement, at CLUB CAR’s option, of the vehicle or component thereof that CLUB CAR deems to be defective. Replacement shall mean furnishing, during the applicable limited warranty period, a new vehicle or factory-reconditioned vehicle or component thereof that is identical or reasonably equivalent to the warranted product or component at no cost to the purchaser. Repair shall mean remedying a defect in the vehicle or component thereof at no cost to the purchaser during the applicable limited

warranty period. CLUB CAR reserves the right to test and recharge any component returned for adjustment. If CLUB CAR elects to repair the vehicle or component, it may provide factory-reconditioned parts or components. All parts and components replaced under warranty shall become the property of CLUB CAR.

**DISCLAIMER**

THIS LIMITED WARRANTY IS EXCLUSIVE. CLUB CAR MAKES NO OTHER WARRANTY OF ANY KIND, EXPRESSED OR IMPLIED. ANY IMPLIED WARRANTIES OF MERCHANTABILITY OR FITNESS FOR A PARTICULAR PURPOSE ARE HEREBY DISCLAIMED BY CLUB CAR AND EXCLUDED FROM THIS WARRANTY. THE PURCHASER AND CLUB CAR EXPRESSLY AGREE THAT THE SOLE REMEDY OF THE REPLACEMENT OR REPAIR OF THE DEFECTIVE VEHICLE OR COMPONENT THEREOF IS THE SOLE REMEDY OF THE PURCHASER. CLUB CAR MAKES NO OTHER REPRESENTATION OR WARRANTY OF ANY KIND, AND NO REPRESENTATIVE, EMPLOYEE, DISTRIBUTOR OR DEALER OF CLUB CAR HAS THE AUTHORITY TO MAKE OR IMPLY ANY REPRESENTATION, PROMISE OR AGREEMENT, WHICH IN ANY WAY VARIES THE TERMS OF THIS WARRANTY.

In the event that another pre-printed warranty document, certificate or both offered by or through Club Car at the time of sale of this vehicle (each an “Additional Warranty Document”) is deemed to conflict with the limitations or exclusions contained herein, the limitations and exclusions contained herein shall continue to apply to both this limited warranty statement and, to the maximum extent permitted by law, to each Additional Warranty Document.

**NO CONSEQUENTIAL DAMAGES**

IN NO EVENT SHALL CLUB CAR BE LIABLE FOR ANY INCIDENTAL OR CONSEQUENTIAL DAMAGES INCLUDING, BUT NOT LIMITED TO, LOSS RELATED TO PROPERTY OTHER THAN THE VEHICLE, LOSS OF USE, LOSS OF TIME, INCONVENIENCE, OR ANY OTHER ECONOMIC LOSS.

Some states allow neither limitation on the duration of an implied warranty nor exclusions or limitation of incidental or consequential damages. Therefore, the above limitations or exclusions may not apply to you. This warranty gives you specific legal rights, and you may also have other rights, which vary from state to state.

**HOW TO MAKE A WARRANTY CLAIM**

To make a warranty claim under this limited warranty, you must present the vehicle or defective component with evidence of proof of purchase date and number of amp hours (if applicable) to an authorized CLUB CAR dealer.

For warranty-related communication, contact Warranty Services, Club Car, 4125 Washington Rd., Evans, GA 30809, USA, 1–800–CLUBCAR (258–2227) or cci_warrantyadministration@clubcar.com..

**WARNING**

Any modification or change to the vehicle that affects the electrical system, stability or handling of the vehicle, or increases maximum vehicle speed beyond factory specifications, could result in severe personal injury or death.

## FEDERAL EMISSIONS COMPONENT DEFECT WARRANTY

EMISSIONS COMPONENT DEFECT WARRANTY COVERAGE - This emission warranty is applicable in all States, except the State of California.

Club Car, LLC (“CLUB CAR”) warrant(s) to the initial retail purchaser and each subsequent owner, that this Non-road engine (“engine”) has been designed, built, and equipped to conform at the time of initial sale to all applicable regulations of the U.S. Environmental Protection Agency (EPA), and that the engine is free of defects in materials and workmanship which would cause this engine to fail to conform with EPA regulations during its warranty period.

For the components listed under PARTS COVERED, the service dealer authorized by CLUB CAR will, at no cost to you, make the necessary diagnosis, repair, or replacement necessary to ensure that the engine complies with applicable U.S. EPA regulations.

EMISSION COMPONENT DEFECT WARRANTY PERIOD

The warranty period for this engine begins on the date of sale to the initial purchaser and continues for a period of three years.

PARTS COVERED

Listed below are the parts covered by the Emission Components Defect Warranty. Some of the parts listed below may require scheduled maintenance and are warranted up to the first scheduled replacement point for that part.

EXHAUST EMISSIONS

1. **Fuel Metering System**
   - 1.1. Throttle Body, carburetor, and internal parts (and/or pressure regulator or fuel injection system)
   - 1.2. Air/fuel ratio feedback and control system, if applicable
   - 1.3. Cold start enrichment system, if applicable
   - 1.4. Fuel pump and fuel pressure regulator
   - 1.5. Fuel tank
   - 1.6. Oil temperature sensor
2. **Air Induction System**
   - 2.1. Intake manifold, if applicable
   - 2.2. Air filter
3. **Ignition System**
   - 3.1. Spark plugs
   - 3.2. Magneto or electronic ignition system
   - 3.3. Spark advance/retard system, if applicable
4. **Catalyst or Thermal Reactor System**
   - 4.1. Exhaust Manifold, if applicable
5. **Miscellaneous Items Used in Above Systems**
   - 5.1. Electronic controls (ECU), if applicable
   - 5.2. Hoses, belts, connectors, gaskets, brackets, clamps, accessories, and assemblies used in the above systems.

EVAPORATIVE EMISSIONS

1. Fuel Line
2. Fuel Line Fittings
3. Clamps

4. Fuel Tank
5. Fuel Cap
6. Vapor Hoses
7. Carbon Canister
8. Carbon Canister Mounting Brackets
9. Air Cleaner Purge Port Connector

REPLACEMENT PARTS DISTRIBUTION CENTER

Replacement parts are provided to the market upon request by the customers. Replacement parts distribution center is located at the Service Parts Department, Club Car, 4125 Washington Road, Evans, Georgia 30809, U.S.A., 1–800–CLUBCAR (258–2227). If you have a question regarding your replacement part, you should contact CLUB CAR at 1–800–CLUBCAR (258–2227).

OBTAINING WARRANTY SERVICE

To obtain warranty service, take your engine to the nearest authorized CLUB CAR service dealer. Bring your sales receipts indicating date of purchase for this engine. The service dealer authorized by CLUB CAR will perform the necessary repairs or adjustments within a reasonable amount of time and furnish you with a copy of the repair order. All parts and accessories replaced under this warranty become the property of CLUB CAR.

For owners located more than 100 miles from an authorized service center, the following will be provided to those applicable owners (excluding the states with high-altitude areas).

- CLUB CAR will either pay for the shipping costs of replacement parts to and from an authorized service center.
  - Or CLUB CAR will provide for a service technician to come to the owner to make the warranty repair.
  - Or CLUB CAR will pay for the repair to be made at a local non-authorized service center.

WHAT IS NOT COVERED

- Conditions resulting from tampering, misuse, improper adjustment (unless they were made by the service dealer authorized by CLUB CAR during a warranty repair), alteration, accident, failure to use the recommended fuel and oil, or not performing required maintenance services.
  - The replacement parts used for required maintenance services.
  - Consequential damages such as loss of time, inconvenience, loss of use of the engine or equipment, etc.
  - Diagnosis and inspection charges that do not result in warranty-eligible service being performed.
  - Any non-authorized replacement part, or malfunction of authorized parts due to use of non-authorized parts.

OWNER’S WARRANTY RESPONSIBILITIES

As the engine owner, you are responsible for the performance of the required maintenance listed in your owner’s manual. CLUB CAR recommends that you retain all receipts covering maintenance on your engine, but CLUB CAR cannot deny warranty solely for the lack of receipts or for your failure to ensure the performance of all scheduled maintenance.

As the engine owner, you should however be aware that CLUB CAR may deny warranty coverage if your engine or a part has failed due to abuse, neglect, improper maintenance or unapproved modifications.

You are responsible for presenting your engine to the nearest service dealer authorized by CLUB CAR when a problem exists.

If you have any questions regarding your warranty rights and responsibilities, you should contact the CLUB CAR customer service department at 1–800–CLUBCAR (258–2227) for the information.

THINGS YOU SHOULD KNOW ABOUT THE EMISSION CONTROL SYSTEM WARRANTY MAINTENANCE AND REPAIRS

You are responsible for the proper maintenance of the engine. You should keep all receipts and maintenance records covering the performance of regular maintenance in the event questions arise. These receipts and maintenance records should be transferred to each subsequent owner of the engine. CLUB CAR reserves the right to deny warranty coverage if the engine has not been properly maintained. Warranty claims will not be denied, however, solely because of the lack of required maintenance or failure to keep maintenance records.

MAINTENANCE, REPLACEMENT OR REPAIR OF EMISSION CONTROL DEVICES AND SYSTEMS MAY BE PERFORMED BY ANY REPAIR ESTABLISHMENT OR INDIVIDUAL; HOWEVER, WARRANTY REPAIRS MUST BE PERFORMED BY A SERVICE DEALER AUTHORIZED BY CLUB CAR. THE USE OF PARTS THAT ARE NOT EQUIVALENT IN PERFORMANCE AND DURABILITY TO AUTHORIZED PARTS MAY IMPAIR THE EFFECTIVENESS OF THE EMISSION CONTROL SYSTEM AND MAY HAVE A BEARING ON THE OUTCOME OF A WARRANTY CLAIM.

If other than the parts authorized by CLUB CAR are used for maintenance replacements or for the repair of components affecting emission control, you should assure yourself that such parts are warranted by their manufacturer to be equivalent to the parts authorized by CLUB CAR in their performance and durability.

HOW TO MAKE A CLAIM

All repairs qualifying under this limited warranty must be performed by a service dealer authorized by CLUB CAR. In the event that any emission-related part is found to be defective during the warranty period, you shall notify CLUB CAR customer service department at 1–800–CLUBCAR (258–2227) and you will be advised of the appropriate warranty service dealer or service providers where the warranty repair can be performed.

## CALIFORNIA EMISSION CONTROL WARRANTY STATEMENT

### YOUR WARRANTY RIGHTS AND OBLIGATIONS:

The California Air Resources Board (“CARB”) and Club Car, LLC (“CLUB CAR”) are pleased to explain the emission control system warranty on your 2014 or newer vehicle engine (the “emission warranty”). In California, new small off-road engines (“SORE”) must be designed, built and equipped to meet the State's stringent anti-smog standards. CLUB CAR shall warrant the emission control system on the vehicle engine for the periods of time listed below provided there has been no abuse, neglect or improper maintenance of your small off-road engine.

Your emission control system may include parts such as the carburetor or fuel-injection system, the ignition system, the catalytic converter and related hoses, belts, connectors and other emission assemblies or components.

Where a warrantable condition exists, as defined herein, CLUB CAR will repair your vehicle engine at no cost to you including diagnosis, parts and labor.

### MANUFACTURER'S WARRANTY COVERAGE:

This emission control system is warranted for two years from the vehicles’ date of purchase. If any emission-related part on your CLUB CAR SORE is defective, the part will be repaired or replaced by CLUB CAR.

### OWNER'S WARRANTY RESPONSIBILITIES:

- As the vehicle engine owner, you are responsible for the performance of the required maintenance listed in your owner's manual. CLUB CAR recommends that you retain all receipts covering maintenance on your vehicle engine, but CLUB CAR cannot deny warranty solely for the lack of receipts or for your failure to ensure the performance of all scheduled maintenance.

- As the vehicle engine owner, you should however be aware that CLUB CAR may deny you warranty coverage if vehicle engine or a part has failed due to abuse, neglect, improper maintenance or unapproved modifications.

- You are responsible for presenting vehicle engine to a CLUB CAR distribution center as soon as a problem exists. The warranty repairs should be completed in a reasonable amount of time, not to exceed 30 days. If you have any questions regarding your warranty rights and responsibilities, you should contact WARRANTY SERVICES, CLUB CAR, LLC, P.O. Box 204658, Augusta, Georgia 30917-4658, U.S.A., 1–800–CLUBCAR (258–2227).

### CLUB CAR EXPLANATION OF EMISSION CONTROL WARRANTY:

#### 1. WARRANTY:

CLUB CAR warrants to the ultimate purchaser and each subsequent purchaser that the SORE and related emissions equipment is designed, built and equipped so as to conform with all applicable California environmental emission regulations; and free from defects in materials and workmanship that cause the failure of a warranted part to be identical in all material respects to that part as described in CLUB CAR’s application for certification with CARB. The warranty period begins on the date the engine or equipment is delivered to an ultimate purchaser or first placed into service. The warranty period is two years from the date of purchase.

#### 2. COVERAGE:

Subject to certain conditions and exclusions as stated below, the warranty on emission-related parts is as follows:

(1) Any warranted part that is not scheduled for replacement as required maintenance in the written instructions supplied, is warranted for the warranty period stated above. If the part fails during the period of warranty coverage, the part will be repaired or replaced by CLUB CAR according to subsection (4) below. Any such part repaired or replaced under warranty will be warranted for the remainder of the original warranty period.

(2) Any warranted part that is scheduled only for regular inspection in the written instructions supplied is warranted for the warranty period stated above. Any such part repaired or replaced under warranty will be warranted for the remaining original warranty period.

(3) Any warranted part that is scheduled for replacement as required maintenance in the written instructions supplied is warranted for the period of time before the first scheduled replacement date for that part. If the part fails before the first scheduled replacement, the part will be repaired or replaced by CLUB CAR according to subsection (4) below. Any such part repaired or replaced under warranty will be warranted for the remainder of the period prior to the first scheduled replacement point for the part.

(4) Repair or replacement of any warranted part under the warranty provisions herein must be performed at a warranty station* at no charge to the owner.

(5) Notwithstanding the provisions herein, warranty services or repairs will be provided at all of our distribution centers that are franchised to service the subject engines or equipment.

(6) The engine or equipment owner will not be charged for diagnostic labor that is directly associated with diagnosis of a defective, emission-related warranted part, provided that such diagnostic work is performed at a warranty station*.

(7) CLUB CAR is liable for damages to other engine or equipment components proximately caused by a covered failure under warranty of any warranted part.

(8) Throughout the engine or equipment warranty period stated above, CLUB CAR will maintain a supply of warranted parts sufficient to meet the expected demand for such parts.

(9) Any replacement part may be used in the performance of any warranty maintenance or repairs and must be provided without charge to the owner. Such use will not reduce the warranty obligations of CLUB CAR.

(10) Add-on or modified parts that are not exempted by the Air Resources Board may not be used. The use of any non-exempted add-on or modified parts by the ultimate purchaser will be grounds for disallowing a warranty claims. CLUB CAR will not be liable to warrant failures of warranted parts caused by the use of a non-exempted add-on or modified part.

*CLUB CAR, its authorized dealers, or a service agency approved by CLUB CAR.

**ITEMS COVERED BY THIS WARRANTY:**

The repair or replacement of any warranted part otherwise eligible for warranty coverage may be excluded from such warranty coverage if CLUB CAR demonstrates that the engine or equipment has been abused, neglected, or improperly maintained, and that such abuse, neglect, or improper maintenance was the direct cause of the need for repair or replacement of the part. That notwithstanding, any adjustment of a component that has a factory installed, and properly operating, adjustment limiting device is still eligible for warranty coverage. The following emission warranty parts list are covered:

**SYSTEMS COVERED PARTS DESCRIPTION**

Fuel Metering Carburetor assembly, fuel injection pump, fuel injection nozzle, fuel regulator Exhaust Catalytic Converter, Exhaust Manifold Air Induction Air filter housing, air filter*, crankcase breather tube Ignition Flywheel magneto, ignition pulse generator, ignition coil assembly, ignition control module, spark plug cap, spark plug* Positive Crankcase Ventilation (PCV) System PCV valve, oil filler cap Evaporative System Fuel Tank, Fuel Cap, Fuel Lines, Fuel Line Fittings, Clamps, Pressure Relief Valves, Purge Valves, Vapor Hoses, Carbon Canister, Canister Mounting Brackets, Carbon Canister Purge Port Connector Misc. Parts Belts, hosing, tubing, fittings, seals, gaskets, clamps, and switches associated with the above systems.

Emission-related parts will vary between vehicles; therefore, certain vehicles may not include all of the listed parts or may include equivalent parts.

**3. VOIDING OF WARRANTY:**

THIS AND ANY OTHER WARRANTY SHALL BE VOID IF THE VEHICLE IS ABUSED OR USED IN AN UNINTENDED MANNER OR SHOWS INDICATIONS THAT IT HAS BEEN ALTERED IN ANY WAY, INCLUDING, BUT NOT LIMITED TO, MODIFICATION OF THE SPEED GOVERNOR, BRAKING SYSTEM, STEERING, TRANSAXLE, OR OTHER OPERATING SYSTEMS OF THE VEHICLE TO CAUSE IT TO PERFORM OUTSIDE CLUB CAR SPECIFICATIONS.

**4. HOW TO MAKE A WARRANTY CLAIM:**

To make a warranty claim under this limited warranty, you must present the vehicle or defective component to an authorized CLUB CAR dealer.

## CLUB CAR® LIMITED WARRANTY FOR JAUNT PTV VEHICLES

### WARRANTY

CLUB CAR, LLC ("CLUB CAR") hereby warrants to the Original Purchaser or Lessee, as those terms are defined herein, and subject to the provisions, limitations and exclusions in this limited warranty, that its new vehicle or new component purchased from CLUB CAR or an Authorized Dealer or Distributor shall be free from defects in material and workmanship under normal use and service for the periods stated below, subject to the provisions, limitations and exclusions in this limited warranty.

This limited warranty covers material, workmanship and repair labor cost as to those items specifically listed below for the periods specified. Such repair labor shall be performed only by CLUB CAR, its Authorized Dealers or Distributors, or a service agency approved by CLUB CAR. For repairs made by qualified technicians other than CLUB CAR's factory technicians or an Authorized Dealer or Distributor, CLUB CAR will provide only the replacement parts or components.

IF THE WARRANTY REGISTRATION FORM IS NOT COMPLETED AND RETURNED TO CLUB CAR AT THE TIME OF THE ORIGINAL RETAIL SALE, PURCHASER MUST PROVIDE PROOF OF DATE OF PURCHASE WITH ANY WARRANTY CLAIM.

| **TO THE ORIGINAL OWNER ONLY (NON-TRANSFERABLE)** | COMMERCIAL APPLICATION | PERSONAL APPLICATION |
|---|---|---|
| **GASOLINE ENGINE AND TRANSAXLE:** Engine assembly, transaxle assembly (gasoline vehicle) | 3 YEARS/3000 HOURS | |
| **OTHER POWER TRAIN:** Motor, transaxle assembly (electric vehicle), main frame assembly, clutch. | 2 YEARS/2000 HOURS | |
| **ALL REMAINING COMPONENTS:** Solenoid, MCOR, limit switches, voltage regulators, F&R switches, brake components, wiring harness, electrical switches, canopy systems, seats, pedal group assembly, body and all original equipment options and accessories supplied by CLUB CAR and all remaining components of the vehicle not specified otherwise. | 1 YEAR/1000 HOURS | |
| **8-VOLT BATTERY (STANDARD/HEAVY DUTY)** | 4 YEARS/16000 AMP HOURS | |
| **CONTROLLER** | 4 YEARS/16000 AMP HOURS | |
| **BATTERY CHARGER** | 4 YEARS | |

### EXCLUSIONS

Excluded from any CLUB CAR warranty is damage to a vehicle or component resulting from a cause other than a defect including poor maintenance, neglect, abuse, accident and collision, maintenance adjustments, unreasonable or unintended strain or use, improper installation of accessories, installation of parts or accessories that are not original equipment including Club Car approved or non-approved GPS systems, non-approved alteration and acts of God. Also excluded from any CLUB CAR warranty are all fuses, filters, decals (except safety decals), lubricants, routine wear items such as the charger plug and receptacle, engine mounts, mats, pads, spark plugs, light bulbs, brake shoes, belts, brushes, bushings, drive buttons, cosmetic deterioration, and items that deteriorate, fade or fail due to exposure or ordinary wear and tear.

The provisions of this limited warranty shall not apply to failure due to the following conditions:

1. Abuse such as overcharging, undercharging, improper fluid levels, loose wiring and fasteners, or rusted or corroded hardware.
2. Use of water in batteries, including tap water, that contains impurities. Distilled water or a properly maintained, Club Car approved battery water deionizer and filter system should be used to ensure water quality.
3. Lack of proper maintenance such as preventive maintenance checks, proper rotation of vehicles in a fleet application, maintaining proper tire pressure and alignment and tightening loose wire connections as outlined in the owner's manual.
4. Damages caused by improper installation of the component.

5. Neglect, breakage, freezing, fire, explosion, wreckage, melted terminal posts, the addition of any chemical, or the operation of the battery in an uncharged condition (below half charge 1.200 specific gravity); the installation of the batteries in reverse or recharging in reverse, breakage of containers, covers, or terminal post, or batteries used in applications for which they were not designed.
6. A battery damaged by a defective charger or batteries in vehicles that do not receive proper charging.
7. A vehicle not having an operational charger on a circuit that has the parameters specified in the vehicle owner's manual. (Number of operational chargers must equal the number of operational vehicles.)
8. Improper charging of a vehicle due to the use of a battery charger model not approved by Club Car for use with the vehicle.
9. Failed semiconductor parts such diodes and fuses that are vulnerable to electrical overloads (including lightning) beyond the control of CLUB CAR.
10. Damaged charger DC cord set with plug, which is a wear item and subject to user abuse.
11. Use of gasoline containing more than 10% ethanol.

Without limiting the generality of the foregoing in any way, and as part of its limited warranty exclusion, CLUB CAR does not warrant that its vehicle or components such as batteries, computer, controller or electrical device are suitable for use in any application other than in its products. As in the use of any vehicle, batteries, computer, controller or electrical device, a prudent owner will read and study the owner's manual, the operator instructions and the warning labels; and will exercise due care in working on or around vehicles, batteries or electrical devices.

Transportation expenses for warranty services are also excluded from this warranty.

**VOIDING OF WARRANTY**

THIS AND ANY OTHER WARRANTY SHALL BE VOID IF THE VEHICLE OR COMPONENT IS ABUSED OR USED IN AN UNINTENDED MANNER OR SHOWS INDICATIONS THAT IT HAS BEEN ALTERED IN ANY WAY, INCLUDING, BUT NOT LIMITED TO, MODIFICATION OF THE SPEED GOVERNOR, BRAKING SYSTEM, STEERING, TRANSAXLE, OR OTHER OPERATING SYSTEMS OF THE CAR TO CAUSE IT TO PERFORM OUTSIDE CLUB CAR SPECIFICATIONS. THE WARRANTY IS LIKEWISE VOID IF THE VEHICLE SHOWS INDICATIONS THAT REASONABLE OR NECESSARY MAINTENANCE AS OUTLINED IN THE OWNER'S MANUAL AND MAINTENANCE AND SERVICE MANUAL WAS NOT PERFORMED AT THE TIME AND IN THE MANNER SPECIFIED IN SUCH MANUALS.

**SOLE REMEDY**

CLUB CAR's liability under this limited warranty or in any action whether based upon warranty, contract, negligence, strict product liability or otherwise, shall be the repair or replacement, at CLUB CAR's option, of the vehicle or component thereof that CLUB CAR deems to be defective. Replacement shall mean furnishing, during the applicable limited warranty period, a new vehicle or factory-reconditioned vehicle or component thereof that is identical or reasonably equivalent to the warranted product or component at no cost to the purchaser. Repair shall mean remedying a defect in the vehicle or component thereof at no cost to the purchaser during the applicable limited warranty period. CLUB CAR reserves the right to test and recharge any component returned for adjustment. If CLUB CAR elects to repair the vehicle or component, it may provide factory-reconditioned parts or components. All parts and components replaced under warranty shall become the property of CLUB CAR.

**DISCLAIMER**

THIS LIMITED WARRANTY IS EXCLUSIVE. CLUB CAR MAKES NO OTHER WARRANTY OF ANY KIND, EXPRESSED OR IMPLIED. ANY IMPLIED WARRANTIES OF MERCHANTABILITY OR FITNESS FOR A PARTICULAR PURPOSE ARE HEREBY DISCLAIMED BY CLUB CAR AND EXCLUDED FROM THIS WARRANTY. THE PURCHASER AND CLUB CAR EXPRESSLY AGREE THAT THE SOLE REMEDY OF THE REPLACEMENT OR REPAIR OF THE DEFECTIVE VEHICLE OR COMPONENT THEREOF IS THE SOLE REMEDY OF THE PURCHASER. CLUB CAR MAKES NO OTHER REPRESENTATION OR WARRANTY OF ANY KIND, AND NO REPRESENTATIVE, EMPLOYEE, DISTRIBUTOR OR DEALER OF CLUB CAR HAS THE AUTHORITY TO MAKE OR IMPLY ANY REPRESENTATION, PROMISE OR AGREEMENT, WHICH IN ANY WAY VARIES THE TERMS OF THIS WARRANTY.

In the event that another pre-printed warranty document, certificate or both offered by or through Club Car at the time of sale of this vehicle (each an “Additional Warranty Document”) is deemed to conflict with the limitations or exclusions contained herein, the limitations and exclusions contained herein shall continue to apply to both this limited warranty statement and, to the maximum extent permitted by law, to each Additional Warranty Document.

**NO CONSEQUENTIAL DAMAGES**

IN NO EVENT SHALL CLUB CAR BE LIABLE FOR ANY INCIDENTAL OR CONSEQUENTIAL DAMAGES INCLUDING, BUT NOT LIMITED TO, LOSS RELATED TO PROPERTY OTHER THAN THE VEHICLE, LOSS OF USE, LOSS OF TIME, INCONVENIENCE, OR ANY OTHER ECONOMIC LOSS.

Some states allow neither limitation on the duration of an implied warranty nor exclusions or limitation of incidental or consequential damages. Therefore, the above limitations or exclusions may not apply to you. This warranty gives you specific legal rights, and you may also have other rights, which vary from state to state.

**HOW TO MAKE A WARRANTY CLAIM**

To make a warranty claim under this limited warranty, you must present the vehicle or defective component with evidence of proof of purchase date and number of amp-hours (if applicable) to an authorized CLUB CAR dealer.

For warranty-related communication, contact Warranty Services, Club Car, 4125 Washington Rd., Evans, GA 30809, USA, 1–800–CLUBCAR (258–2227) or cci_warrantyadministration@clubcar.com.

**WARNING**

Any modification or change to the vehicle that affects the electrical system, stability or handling of the vehicle, or increases maximum vehicle speed beyond factory specifications, can result in severe personal injury or death.

# EC DECLARATION OF CONFORMITY

When properly configured, the vehicle complies with the listed Directives.

## Declaration of Conformity

| Model Code | Model Number | Model Name |
|---|---|---|
| JE | 105031301 | Precedent i2 Excel |
| JF | 105031401 | Precedent i2L Excel |
| JH | 105031501 | Precedent i2 4 Passenger Excel |
| JN | 105031701 | Precedent i2 Signature |
| JW | 105031801 | Precedent i2 4 Passenger Signature |

Serial numbers 1401000001 and greater

Four-wheel electric vehicles in the above series that bear the CE mark fulfill all the relevant provisions of the following Directives
Enspricht den Bestimmungen, Conforme Aux Directives, Conforme Con Las Directivas, Voldoet aan Richtlijnen, De Acordo com Directiva, Conforme Alla Direttiva, Opfylder folgende direktiver, Uppfyller foljande direktiv

2006/42/EC Machinery
2006/66/EC Batteries and Accumulators and Waste Batteries and Accumulators
2004/108/EC Electromagnetic Compatibility

Standards used for verification
Standards fur Uberprufung, Normes Utilisee pour Verification, Normas Usado por Comprobacion, Waarden Aangewend voor Verificatie, Modelos Utilizado para Verifcacao, Standard per la Verifica, Standarder Anvendte Nemlig Efterprovning, Standarden Anvand for Bekraftanden

EN 61000-6-2
EN 61000-6-4

Manufacturer
Hersteller, Fabricant, Fabricante, Fabrikant, Fabricante, Fabbricante, Producent, Tillverkare

Club Car, LLC
4125 Washington Road
Evans, Georgia 30809
USA

Authorized representative and person authorized to compile the technical file
Autorisierter Händler, Representant Dument Accrédité, Representante Autorizado, Wettige Vertegenwoordiging, Representate Autorizado, Rappresentante Autorizzato, Autoriscret repræsentant, Auktoriserad representant:

Club Car Ingersoll Rand
Alma Court Building
Lenneke Marelaan 6
B-1932 Sint-Stevens-Woluwe, Belgium

Geoff Stewart — May 1, 2013
Lead Engineer, Product Safety — Evans, Georgia, USA

H:\ECS\ELEC CE CERT 2014.DOC

# Declaration of Conformity

| Model Code | Model Number | Model Name |
|---|---|---|
| SL | 105032401 | Precedent i2 Gas |
| SM | 105032501 | Precedent i2L Gas |
| SN | 105032601 | Precedent i2 4 Passenger Gas |
| SU | 105033001 | Precedent i2 Signature Gas |
| SV | 105033101 | Precedent i2 4 Passenger Signature |

Serial numbers 1501000001 and greater

Four-wheel gasoline vehicles in the above series that bear the CE mark fulfill all the relevant provisions of the following Directives
Enspricht den Bestimmungen, Conforme Aux Directives, Conforme Con Las Directivas, Voldoet aan Richtlijnen, De Acordo com Directiva, Conforme Alla Direttiva, Opfylder folgende direktiver, Uppfyller foljande direktiv

2006/42/EC Machinery
2006/66/EC Batteries and Accumulators and Waste Batteries and Accumulators

Standards used for verification
Standards fur Uberprufung, Normes Utilisees pour Verification, Normas Usado por Comprobacion, Waarden Aangewend voor Verificatie, Modelos Utilizado para Verifcacao, Standard per la Verifica, Standarder Anvendte Nemlig Efterprovning, Standarden Anvand for Bekraftanden

N/A

Manufacturer
Hersteller, Fabricant, Fabricante, Fabrikant, Fabricante, Fabbricante, Producent, Tillverkare

Club Car, LLC
4125 Washington Road
Evans, Georgia 30809
USA

Authorized representative and person authorized to compile the technical file
Autorisierter Händler, Representant Dument Accrédité, Representante Autorizado, Wettige Vertegenwoordiging, Representate Autorizado, Rappresentante Autorizzato, Autoriscret repræsentant, Auktoriserad representant:

Club Car Ingersoll Rand
Alma Court Building
Lenneke Marelaan 6
B-1932 Sint-Stevens-Woluwe, Belgium



Geoff Stewart — May 1, 2014
Lead Engineer, Product Safety — Evans, Georgia, USA

Publication Part Number 105062702

Edition Code 0514F1115E

105062702

Club Car®

**Club Car, LLC**
P.O. Box 204658
Augusta, GA 30917-4658
USA

**Web** www.clubcar.com
**Phone** 1.706.863.3000
1.800.ClubCar
**Int'l** +1 706.863.3000
**Fax** 1.706.863.5808